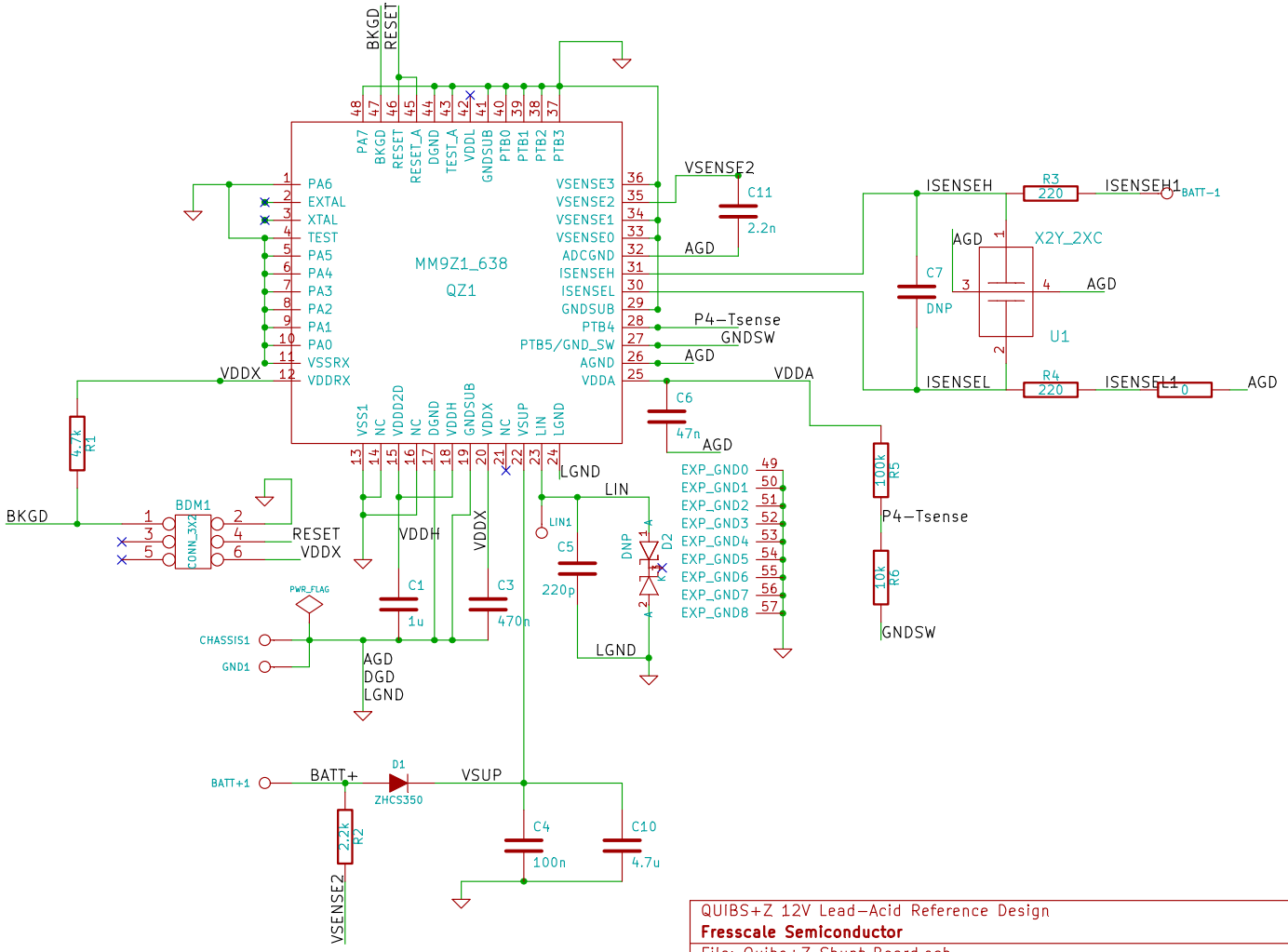

QUIBS+Z 12V Lead-Acid Reference Design

Fresscale Semiconductor

File: Quibs+Z Shunt Board.sch

Sheet: /

Title: RD-9Z1-638 REV 1.0

Size: A4	Date: 26 feb 2013	**Rev:**
KiCad E.D.A. eeschema (2012-01-19 BZR 3256)-stable		Id: 1/1