1322x Network Node

Reference Manual

Document Number: 1322xNNRM
Rev. 1.5
11/2010

How to Reach Us:

Home Page:
www.freescale.com

E-mail:
support@freescale.com

USA/Europe or Locations Not Listed:
Freescale Semiconductor
Technical Information Center, CH370
1300 N. Alma School Road
Chandler, Arizona 85224
+1-800-521-6274 or +1-480-768-2130
support@freescale.com

Europe, Middle East, and Africa:
Freescale Halbleiter Deutschland GmbH
Technical Information Center
Schatzbogen 7
81829 Muenchen, Germany
+44 1296 380 456 (English)
+46 8 52200080 (English)
+49 89 92103 559 (German)
+33 1 69 35 48 48 (French)
support@freescale.com

Japan:
Freescale Semiconductor Japan Ltd.
Headquarters
ARCO Tower 15F
1-8-1, Shimo-Meguro, Meguro-ku,
Tokyo 153-0064, Japan
0120 191014 or +81 3 5437 9125
support.japan@freescale.com

Asia/Pacific:
Freescale Semiconductor Hong Kong Ltd.
Technical Information Center
2 Dai King Street
Tai Po Industrial Estate
Tai Po, N.T., Hong Kong
+800 2666 8080
support.asia@freescale.com

***For Literature Requests Only*:**
Freescale Semiconductor Literature Distribution Center
P.O. Box 5405
Denver, Colorado 80217
1-800-521-6274 or 303-675-2140
Fax: 303-675-2150
LDCForFreescaleSemiconductor@hibbertgroup.com

Information in this document is provided solely to enable system and software implementers to use Freescale Semiconductor products. There are no express or implied copyright licenses granted hereunder to design or fabricate any integrated circuits or integrated circuits based on the information in this document.

Freescale Semiconductor reserves the right to make changes without further notice to any products herein. Freescale Semiconductor makes no warranty, representation or guarantee regarding the suitability of its products for any particular purpose, nor does Freescale Semiconductor assume any liability arising out of the application or use of any product or circuit, and specifically disclaims any and all liability, including without limitation consequential or incidental damages. “Typical” parameters that may be provided in Freescale Semiconductor data sheets and/or specifications can and do vary in different applications and actual performance may vary over time. All operating parameters, including “Typicals”, must be validated for each customer application by customer’s technical experts. Freescale Semiconductor does not convey any license under its patent rights nor the rights of others. Freescale Semiconductor products are not designed, intended, or authorized for use as components in systems intended for surgical implant into the body, or other applications intended to support or sustain life, or for any other application in which the failure of the Freescale Semiconductor product could create a situation where personal injury or death may occur. Should Buyer purchase or use Freescale Semiconductor products for any such unintended or unauthorized application, Buyer shall indemnify and hold Freescale Semiconductor and its officers, employees, subsidiaries, affiliates, and distributors harmless against all claims, costs, damages, and expenses, and reasonable attorney fees arising out of, directly or indirectly, any claim of personal injury or death associated with such unintended or unauthorized use, even if such claim alleges that Freescale Semiconductor was negligent regarding the design or manufacture of the part.

ARM is the registered trademark of ARM Limited. ARM7TDMI-S is the trademark of ARM Limited.

Freescale™ and the Freescale logo are trademarks of Freescale Semiconductor, Inc. All other product or service names are the property of their respective owners.

© Freescale Semiconductor, Inc. 2005, 2006, 2007, 2008, 2009, 2010. All rights reserved.

Contents

About This Book

Audience . . . iii
Organization . . . iii
Revision History . . . iii

Chapter 1
Safety Information

1.1 FCC Guidelines . . . 1-1
1.2 FCC Labeling . . . 1-1
1.2.1 47 C.F.R. Sec. 15.21 . . . 1-1
1.2.2 47 C.F.R. Sec.15.105(b) . . . 1-2
1.2.3 47 C.F.R. Sec.15.203 . . . 1-2
1.3 Regulatory Approval For Canada . . . 1-2
1.4 Disposal Instructions . . . 1-2

Chapter 2
1322x Network Node Module Overview and Description

2.1 Introduction . . . 2-1
2.2 Available Devices . . . 2-2
2.3 Features . . . 2-2
2.4 Driver Considerations . . . 2-3
2.5 Board Level Specifications . . . 2-4

Chapter 3
System Overview and Functional Block Descriptions

3.1 System Block Diagram . . . 3-1
3.2 System Overview . . . 3-2
3.3 Power Management and Measurement . . . 3-3
3.4 Low-cost 2.4 GHz ISM Band radio . . . 3-4
3.5 USB Interface . . . 3-4
3.6 User Interface . . . 3-4
3.7 128x64 Pixel Monochrome Graphic LCD Display . . . 3-5
3.8 Debug/Development Interfaces . . . 3-5
3.9 Audio Subsystem . . . 3-5
3.10 GPIO Connector . . . 3-6
3.11 Clocks . . . 3-6

Chapter 4
Interface Locations and Pinouts

4.1 Overview . . . 4-1
4.2 Power Management . . . 4-2

4.2.1 Supply Sources 4-2
4.2.2 On/Off Switch and Power On Indicator 4-2
4.2.3 Power Measurement 4-2
4.3 RF Circuitry 4-3
4.4 USB Connector (“B” Receptacle). 4-3
4.5 LEDs, Switch, Buttons and Joystick. 4-4
4.6 LCD Connector. 4-5
4.7 Debug/Development Connectors 4-5
4.7.1 ARM JTAG Interface Connector 4-5
4.7.2 Nexus Mictor Interface Connector 4-6
4.8 Audio Subsystem Connections 4-7
4.9 GPIO Connector 4-7
4.10 FLASH Memory Recovery Jumpers and Erase 4-8
4.11 ADC Voltage References 4-9
4.12 Jumper Selection. 4-10

Chapter 5
Schematic, Board Layout, and Bill of Material

Chapter 6
PCB Manufacturing Specifications

6.1 Single PCB Construction 6-1
6.2 Panelization. 6-2
6.3 Materials 6-3
6.4 Solder Mask 6-3
6.5 Silk Screen 6-3
6.6 Electrical PCB Testing 6-3
6.7 Packaging 6-3
6.8 Hole Specification/Tool Table 6-4
6.9 File Description. 6-4

About This Book

This manual describes Freescale's 1322x Network Node evaluation board. The 1322x Network Node contains a Freescale third-generation, low power, 2.4 GHz radio frequency transceiver, with 32-bit ARM7 core based MCU, hardware acceleration for both the IEEE Standard 802.15.4 MAC and AES security, and a full set of MCU peripherals into an 99-pin LGA Platform-in-Package (PiP).

Audience

This manual is intended for system designers.

Organization

This document is organized into six chapters.

Chapter 1	Safety Information — Highlights some of the FCC requirements.
Chapter 2	1322x Network Node Module Overview and Description — This chapter introduces 1322x Network Node (NN) which is an IEEE, 802.15.4 compliant evaluation board based on the Freescale MC1322x device.
Chapter 3	System Overview and Functional Block Descriptions — This section provides an overview of the Network Node and block diagrams.
Chapter 4	Interface Locations and Pinouts — This chapter provides a description of the interface locations and pinout of the 1322x Network Node circuit board.
Chapter 5	Schematic and Bill of Materials — This chapter provides the schematic, board layout, and Bill of Materials (BOM).
Chapter 6	PCB Manufacturing Specifications — This chapter provides the specifications used to manufacture the 1322x Network Node printed circuit board (PCB).

Revision History

The following table summarizes revisions to this document since the previous release (Rev 1.4).

Revision History

Location	Revision
Chapter 2 Chapter 4	Added dimensions to photos.

Definitions, Acronyms, and Abbreviations

The following list defines the acronyms and abbreviations used in this document.

ADC	Analog to Digital Converter
AES	Advanced Encryption Standard
ARM	Advanced RISC Machine
COG	Chip on Glass
CTS	Clear to Send
DAC	Digital to Analog Converter
DMA	Direct Memory Access
I2C	Inter-Integrated Circuit is a multi-master serial computer bus
ISM	Industrial Scientific Medical 2.4 GHz radio frequency band
JTAG	Joint Test Action Group
LCD	Liquid Crystal Display
LGA	Land Grid Array
MAC	Media Access Controller
MCU	Microcontroller Unit
NEXUS	An embedded processor development tool interface that helps design engineers identify software and hardware-level issues.
NN	Network Node
PCB	Printed circuit board
PiP	Platform in Package
PWM	Pulse-width modulation
RTS	Request to Send
SMA Connector	Sub Miniature version “A” connector
SPI	Serial Peripheral Interface
SSI	Synchronous Serial Interface
TACT Switch	A switch that provides a slight “snap” or “click” to the user to indicate function.
TELCO	Telephone Company
USB	Universal Serial Bus
VCP	Virtual Com Port

Chapter 1
Safety Information

1.1 FCC Guidelines

This equipment is for use by developers for evaluation purposes only and must not be incorporated into any other device or system. This device may not be sold to the general public. Integrators will be responsible for reevaluating the end product (including the transmitter) and obtaining a separate FCC authorization.

FCC approval of this device only covers the original configuration of this device as supplied. Any modifications to this product, including changes shown in this manual, may violate the rules of the Federal Communications Commission and Industry Canada and make operation of the product unlawful.

1.2 FCC Labeling

FCC labels are physically located on the back of the board.

1.2.1 47 C.F.R. Sec. 15.21

This equipment has been tested and found to comply with the limits for a Class B digital device, pursuant to part 15 of the FCC Rules. These limits are designed to provide reasonable protection against harmful interference in a residential installation. This equipment generates, uses and can radiate radio frequency energy and, if not installed and used in accordance with the instructions, may cause harmful interference to radio communications. However, there is no guarantee that interference will not occur in a particular installation. If this equipment does cause harmful interference to radio or television reception, which can be determined by turning the equipment off and on, the user is encouraged to try to correct the interference by one or more of the following measures:

- Reorient or relocate the receiving antenna.
- Increase the separation between the equipment and receiver.
- Connect the equipment into an outlet on a circuit different from that to which the receiver is connected.
- Consult the dealer or an experienced radio/TV technician for help.

1.2.2 47 C.F.R. Sec.15.105(b)

This equipment complies with FCC radiation exposure limits set forth for an uncontrolled environment. The antenna(s) used for this equipment must be installed to provide a separation distance of at least 8 inches (20cm) from all persons.

This device complies with Part 15 of the FCC Rules. Operation is subject to the following three conditions:

1. This device may not cause harmful interference.
2. This device must accept any interference received, including interference that may cause undesired operation.
3. This device is susceptible to electrostatic discharge (ESD) and surge phenomenon.

1.2.3 47 C.F.R. Sec.15.203

An intentional radiator shall be designed to ensure that no antenna other than that furnished by the responsible party shall be used with the device. The use of a permanently attached antenna or of an antenna that uses a unique coupling to the intentional radiator shall be considered sufficient to comply with the provisions of this Section. The manufacturer may design the unit so that a broken antenna can be replaced by the user, but the use of a standard antenna jack or electrical connector is prohibited. This requirement does not apply to carrier current devices or to devices operated under the provisions of Sections 15.211, 15.213, 15.217, 15.219, or 15.221. Further, this requirement does not apply to intentional radiators that must be professionally installed, such as perimeter protection systems and some field disturbance sensors, or to other intentional radiators which, in accordance with Section 15.31(d), must be measured at the installation site. However, the installer shall be responsible for ensuring that the proper antenna is employed so that the limits in this Part are not exceeded.

1.3 Regulatory Approval For Canada

This Class B digital apparatus complies with Canadian ICES-003 and RSS 210, Issue 7.

Cet appareil numérique de la classe B est conforme à la norme NMB-003 du Canada.

1.4 Disposal Instructions

This product may be subject to special disposal requirements. For product disposal instructions, refer to www.freescale.com/productdisposal.

Chapter 2
1322x Network Node Module Overview and Description

2.1 Introduction

The 1322x Network Node (NN) is an IEEE 802.15.4 compliant evaluation board based on the Freescale MC1322x device. The heart of the 1322x Network Node is Freescale's MC1322x 99-pin LGA Platform-in-Package (PiP) solution that can be used for wireless applications ranging from simple proprietary point-to-point connectivity to complete ZigBee mesh networking. The MC1322x is designed to provide a highly integrated, total solution, with premier processing capabilities and very low power consumption.

The 1322x Network Node provides a platform to evaluate the MC1322x device, develop software and applications, and demonstrate IEEE 802.15.4 and ZigBee networking capabilities. The Network Node surrounds the core device with capabilities that provide a complete 802.15.4 radio, user interface, debugging capabilities, connection to personal computers (PCs) and other devices, and portability.

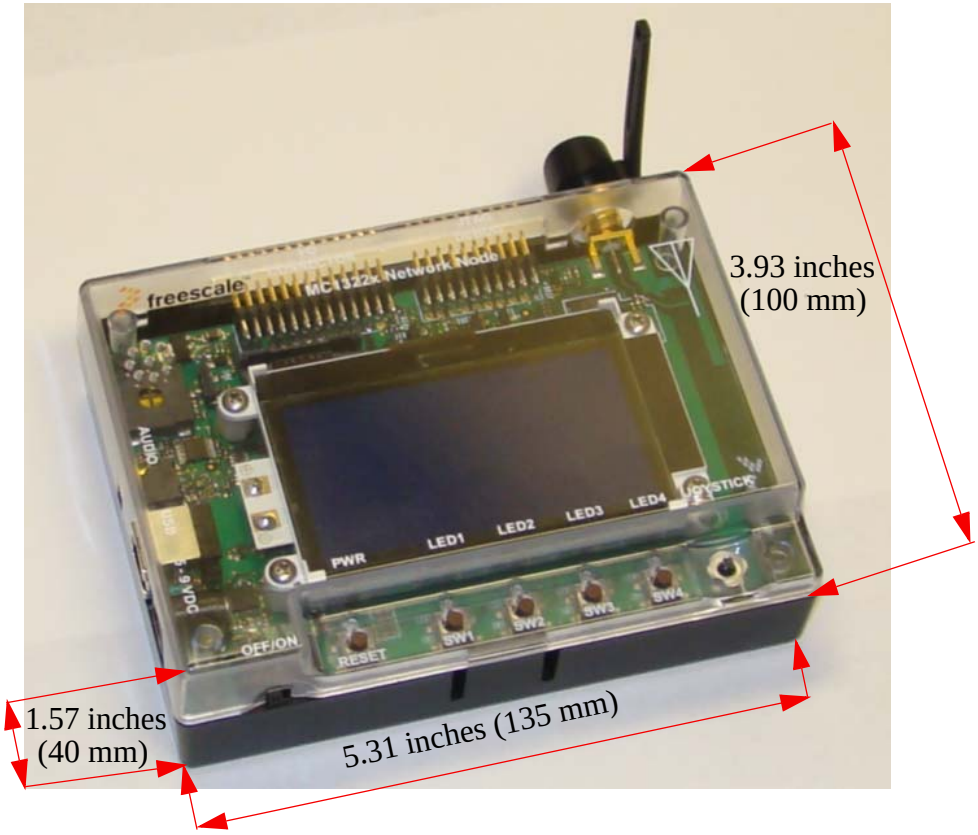

Figure 2-1. 1322x Network Node

2.2 Available Devices

The MC1322x family is available as two part numbers. These device types differ only in their ROM contents, all other device hardware, performance, and specifications are identical:

- MC13224V - this is the original version and is the generic part type. It is intended for most IEEE 802.15.4 applications including MAC-based, ZigBee-2007 Profile 1, and ZigBee RF4CE targets.
- MC13226V - this is a more recent version and is intended specifically for ZigBee-2007 Profile 2 (Pro) applications. Only the onboard ROM image has been changed to optimize ROM usage for the ZigBee Pro profile and maximize the amount of available RAM for application use -
  - The IEEE MAC/PHY functionality has been streamlined to include only that functionality required by the ZigBee specification. Similar to the MC13224V, the MC13226V does not support the Beaconing or GTS MAC/PHY features. The MAC functionality is 802.15.4 compatible.
  - Certain drivers present in the MC13224 ROM were removed. These were the ADC, LCD_font, and SSI drivers. These drivers are still available as library functions, but now compile into the RAM space.
  - The Low Level Component (LLC) functionality has also been streamlined for the ZigBee specification

NOTE

The MC1322x Network Node is available with either the MC13224 or the MC13226. The MC13226 version is identified by exception from the MC13224 version. For the MC13226, the node PCB has a special “13226-NCB” label located between the lower part of the LCD and the push button switch array.

2.3 Features

The 1322x Network Node provides the following features:

- Full IEEE 802.15.4 compliant wireless node; ZigBee capable with Freescale’s BeeStack software stack
- Based on Freescale’s third-generation MC1322x ZigBee platform which incorporates a complete, low power, 2.4 GHz radio frequency transceiver, 32-bit ARM7 core based MCU, hardware acceleration for both the IEEE 802.15.4 MAC and AES security, and a full set of MCU peripherals into a 99-pin LGA Platform-in-Package (PiP)
- MC1322x provides a highly integrated, low cost RF node
  - On-board balun and antenna switch in package
  - Typical -95 dBm sensitivity
  - Typical 0 dBm output power, with max approximately +2 dBm
  - SMA connector with external antenna
- USB interface is bus-powered and full-speed compatible to the USB 2.0 and 1.1 specifications
- 128x64 pixel chip-on-glass monochrome, graphic LCD with LED backlight

- Audio subsystem
  - 2.5mm audio jack for microphone and mono earpiece
  - Input amplifier and anti-aliasing filter for an electret microphone
  - Output path to second order analog filter from either 10-bit serial DAC or PWM as output signal sources
  - I2C controlled 32-position linear nonvolatile volume control for audio circuit
  - Audio output amplifier for both earpiece or on-board dynamic speaker (switched by headset jack)
- Two debug / development interfaces
  - 20-pin connector for standard JTAG debug interface
  - 38-pin MICTOR connector for extended NEXUS real-time debug interface
- Power management circuit with on-board regulation for multiple power sources
  - Can be powered from USB interface, DC power jack or two AA batteries
  - On/Off power switch
  - Power-on green LED
- User interface switches and LEDs
  - 4-directional TACT switch with center push for application purposes
  - 4 pushbuttons for application purposes
  - 4 processor controlled red LEDs for application purposes
  - Reset switch
- 26-pin user header for selected General Purpose Input Output signals and data interfaces
- System clock options
  - Default 24 MHz crystal reference oscillator (13 to 26 MHz crystal optional)
  - Reference oscillator can be driven from an external source
  - Optional 32.768 kHz crystal oscillator for accurate real-time delays

2.4 Driver Considerations

When users first plug a 1322x Network Node into the system, they may be prompted to install drivers. If BeeKit is installed and this occurs, do not allow Windows to automatically search for and install the drivers. Instead, select manual installation and steer Windows to the following directory:

```
C:\Program Files\Freescale\Drivers
```

If installing the BeeKit software package to another drive or directory, indicate the Drivers directory created by the installer in the custom location where BeeKit was installed.

Follow the instructions as they appear on the screen to complete driver installation.

If BeeKit is not installed, be aware of the following:

- The 1322x Network Node uses the FTDI serial to USB converter, Virtual COM Port (VCP) driver for Windows, available at www.ftdichip.com/ftdrivers.htm..
  (Direct (D2XX) drivers are also available.)

- The FTDI web site offers drivers for other platforms including Windows® (98 through Vista x64 and CE), MAC OS (8 through X) and Linux.
- Download the appropriate driver and follow the instructions to complete driver installation.

2.5 Board Level Specifications

Table 2-1. 1322x Network Node Specifications

Parameter				Units	Notes/Conditions
	MIN	TYP	MAX		
General					
Size (Enclosure: X, Y, Z)			135x100x40	mm	
Size (PCB: X, Y)			125 x 85 4.92 x 3.35	mm inches	
Layer build (PCB)		0.8 0.032		mm inches	4-Layer
Dielectric material (PCB)					FR4
Power					
Voltage supply (DC)	4.4	5	12	V	
Voltage supply (USB)	4.4	5	5.25	V	USB 2.0/1.1 standard specification
Voltage supply (Batteries)		3	3.2	V	
Current consumption			100	mA	
Temperature					
Operating temperature (see note)	-20	+25	+70	°C	The operating temperature is limited to +70°C due to the switches and the monochrome-graphic LCD module. Basic circuit is good for a maximum temperature of +85 °C
Storage temperature	-30	+25	+70	°C	
USB interface					USB 2.0 and 1.1 full-speed compatible
Audio					
Audio (Input)		-40		dB	Accepts electret microphone element
Audio (Output)					
Attenuation					
RF					
802.15.4 Frequency range	2405		2480	MHz	All 16 channels in the 2450 MHz band
Range (outdoor / line of sight)		300		Meter	<1% PER for 20-byte packets (point-to-point in communications with 1322X Sensor Reference Board)
RF Transmitter					

Table 2-1. 1322x Network Node Specifications

Parameter				Units	Notes/Conditions
802.15.4 Output power	-30	0	+2	dBm	Over range of Pout from IC control in 2 dB steps. **Note:** On channel 26, output power should not exceed -5 dBm (power setting 0x0E) to meet FCC Part 15 requirements.
Harmonics 2nd harmonics 3rd harmonics			 -30 -30	 dBm dBm	Harmonics are compliant to ETSI and FCC regulatory approval standards
RF Receiver					
802.15.4 sensitivity	-92	-95		dBm	<1% PER for 20-byte packets
Regulatory Approval					
FCC					Product is approved accordingly to the FCC part 15 standard
CE (ETSI)					Product is approved accordingly to the EN 300 328 V1.7.1 (2006-10) standard
CE (EMC)					Product is approved accordingly to the EN 301 489-1 V1.6.1 (2005-09) and EN 301 489-17 V1.2.1 (2002-08) standards
Safety					
UL					Product is approved accordingly to the IEC 60950-1 and EN 60950-1, First Edition standards
Environment					
RoHS					Product complies with the EU Directive 2002/95/EC of 27 January 2003
WEEE					Product complies with the EU Directive 2002/95/EC of 27 January 2003

Chapter 3
System Overview and Functional Block Descriptions

This section provides an overview of the Network Node and block diagrams.

3.1 System Block Diagram

The following is the 1322x Network Node system level block diagram.

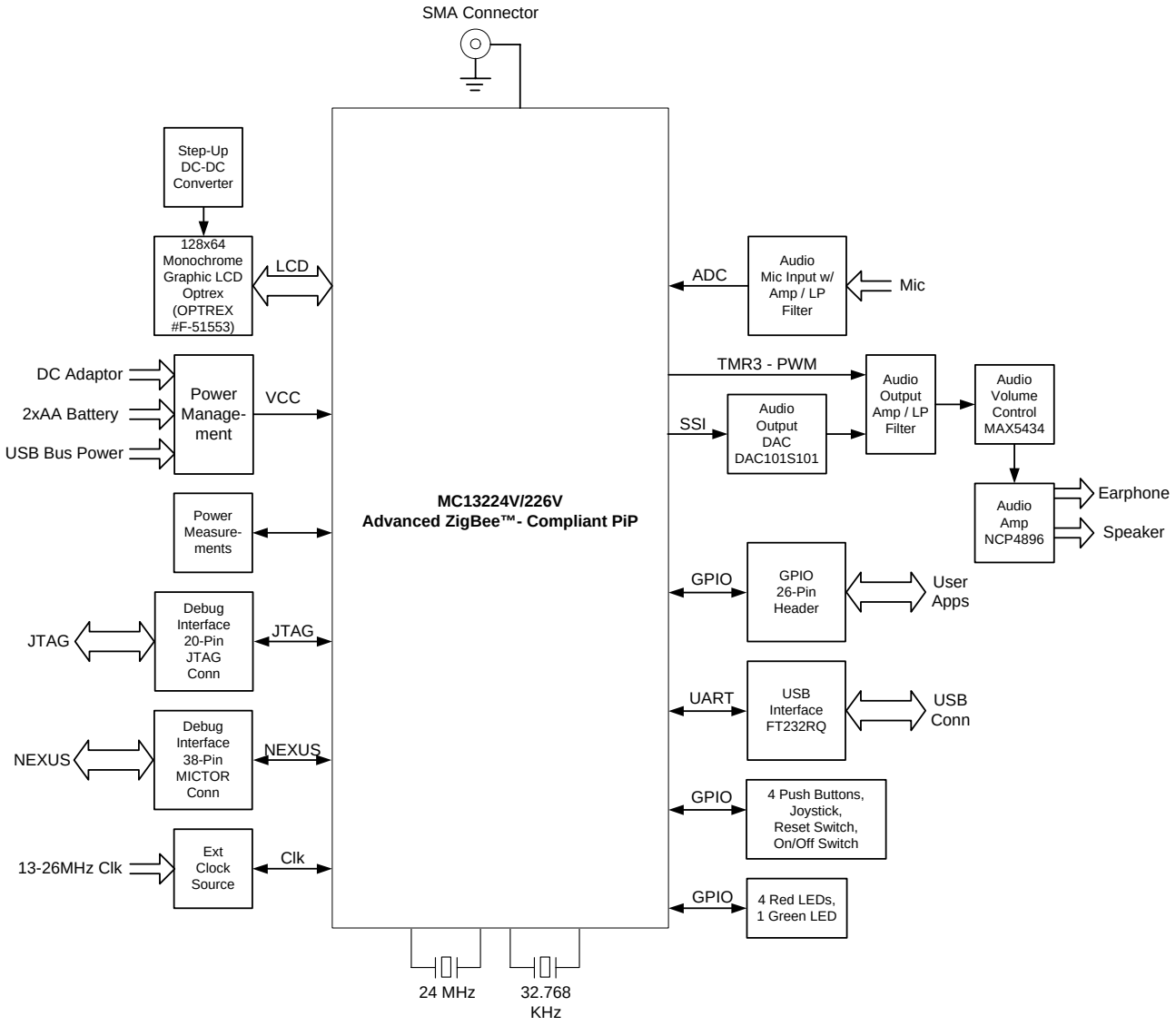

Figure 3-1. 1322x Network Node Block Diagram

3.2 System Overview

The heart of the 1322x Network Node is Freescale's MC1322x 99-pin LGA Platform-in-Package (PiP) solution that can be used for wireless applications ranging from simple proprietary point-to-point connectivity to complete ZigBee mesh networking. The MC1322x is designed to provide a highly integrated, total solution, with premier processing capabilities and very low power consumption.

The MC1322x MCU resources offer superior processing power for ZigBee and IEEE 802.15.4 applications. A full 32-bit ARM7TDMI-S core operates up to 26 MHz. A 128 Kbyte FLASH memory is mirrored into a 96 Kbyte RAM for upper stack and applications software. In addition, an 80 Kbyte ROM is available for boot software, peripheral device drivers, standardized IEEE 802.15.4 MAC and communications stack software. A full set of peripherals and Direct Memory Access (DMA) capability for transceiver packet data complement the processor core.

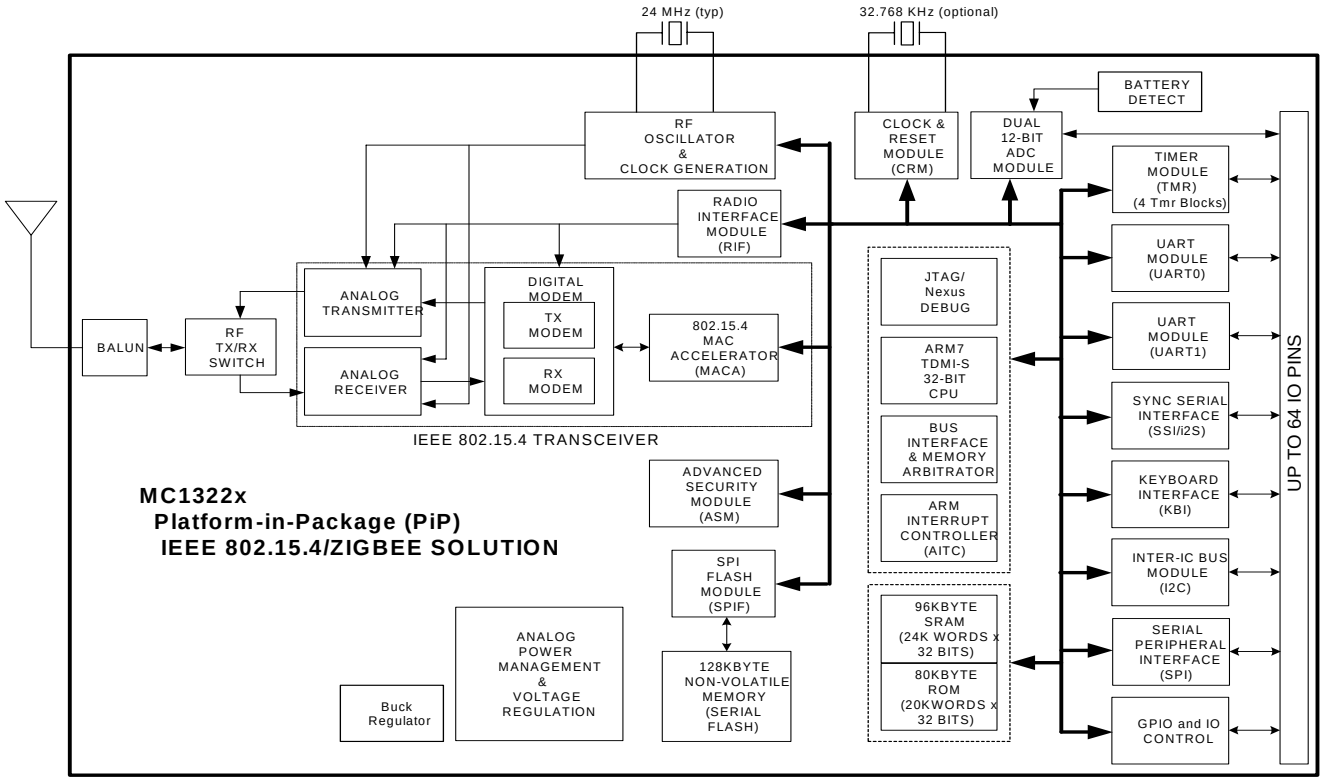

Figure 3-2. MC1322x Block Diagram

On-board peripherals include

- Two dedicated UART modules capable of 2Mbps with CTS/RTS support
- SPI port with programmable master and slave operation
- Keyboard interface capability.
- Two 12-bit analog-to-digital converters (ADCs) with 8 input channels
- Four independent 16-bit timers with PWM capability.
- Inter-integrated circuit (I2C) interface
- Synchronous Serial Interface (SSI) with I2S and SPI capability and FIFO data buffering

The RF radio interface provides for low cost and high density as shown in Figure 3-3. An onboard balun along with a TX/RX switch allows direct connection to a single-ended 50-Ω antenna. The integrated PA provides programmable output power typically from -30 dBm to +2 dBm, and the RX LNA provides -95 dBm sensitivity. This solution also has onboard bypass capacitors and crystal load capacitors for the smallest footprint in the industry. All components are integrated into the package except the crystal and antenna.

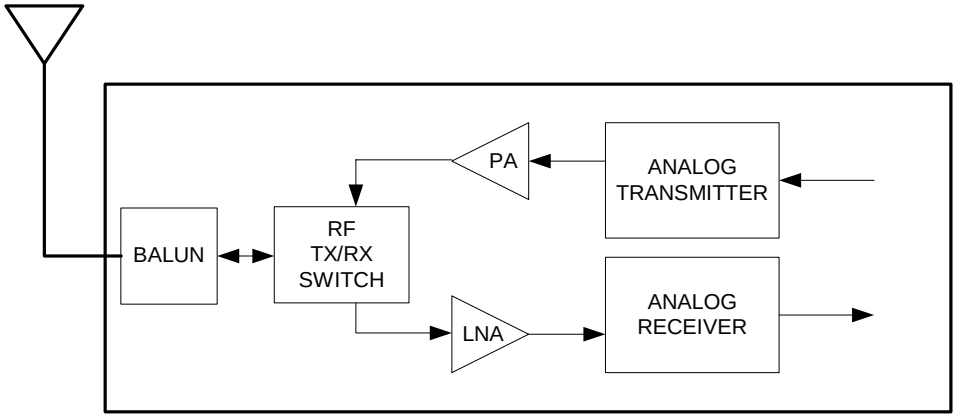

Figure 3-3. MC1322x RF Interface

Augmenting the core device on the Network Node are:

- Low-cost 2.4 GHz ISM Band radio
- 2.0 USB connection
- User interface with pushbuttons, LEDs and 128x64 pixel graphic LCD
- Versatile power sources and management
- Debug / development ports
- Audio subsystem
- GPIO connector for system expansion

Users are encouraged to reference the board schematic for the following sections.

3.3 Power Management and Measurement

To allow maximum versatility, the Network Node can be powered via a DC source (typically an AC-DC converter; nominally 5 Vdc), the USB node, or an onboard battery pack with 2 AA alkaline batteries.

- The DC source or USB will automatically shutdown the battery supply.
- The DC source and the USB power are regulated to 3.3 V, however, the raw battery pack voltage directly supplies the circuitry
- All sources are isolated via diodes.
- An on/off switch and a power-on LED are provided (see Section 4.2.2, “On/Off Switch and Power On Indicator”).
- Zero-ohm resistors are provided to allow isolation and measurement of various system components (see Section 4.2.3, “Power Measurement”)

3.4 Low-cost 2.4 GHz ISM Band radio

The MC1322x provides an onboard balun, antenna switch, and LNA. The only external component required for the radio is an antenna. The Network Node provides a PCB-mounted SMA that connects to an external antenna for a complete solution. Figure 3-4 shows the RF network external to the MC1322x.

- Typical output power is 0 dBm, with +2 dBm max
- Typical sensitivity is -95 dBm.
- Frequency range is 2405 to 2480 MHz
- Typical range (outdoors, line of sight) is 300 meters

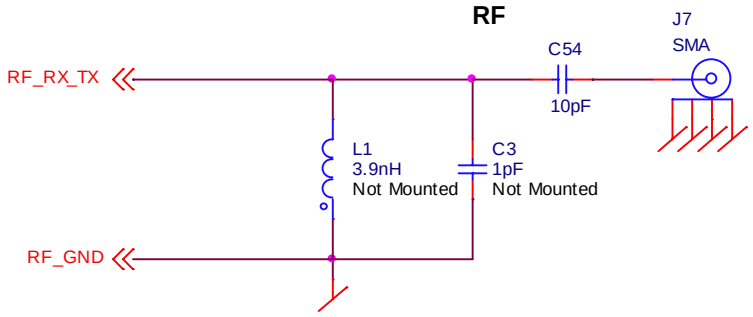

Figure 3-4. Network Node RF Network

The onboard SMA connector is used to mount the provided antenna (see Section 4.3, “RF Circuitry”). The provided antenna must be used to comply with FCC certification.

3.5 USB Interface

For many applications or demonstrations it is desirable to connect the Network Node to a PC or other device. A USB port is provided with a USB “B” receptacle plug. The port is connected to a FTDI FT232R USB UART device that appears as a Virtual COM port (VCP) to the PC. PC drivers are available with the module.

The USB interface is configured as a "Bus Powered" device and will therefore draw all required power from the USB interface. The device is USB 2.0 full speed compatible.

3.6 User Interface

The Network Node provides multiple means for user interface for both debug and demonstration.

- Four individual pushbuttons can be used as input, and a 4-direction tactile joystick switch with center push is wired in parallel with the individual pushbuttons. These pushbuttons have interrupt generation capability, while the joystick center push does not.
- Four individual LEDs can be used as indicators for debug or status.

3.7 128x64 Pixel Monochrome Graphic LCD Display

The Network Node supports a 128x64 pixel chip-on-glass (COG) STN transmissive monochrome graphic LCD that provides for alpha-numeric or graphic readout. The LCD module is mounted on top of the main circuit board and connects via a flat flex cable (FFC).

- The display is an OPTREX #F-51553GNBJ-LW-AB
- Viewing area is 66.8 (W) × 35.5 (H) mm
- The LCD operates from 5 Vdc generated from the main operating voltage - The LCD module requires a highly regulated 5 V so that the high voltages generated onboard the display are consistent.
- The LCD has white LED backlighting with a typical current of 40 mA when full on. The backlighting is switched by a FET and can be modulated to save current and vary the intensity.
- LCD interface to the MCU is via an 4-bit parallel, nibble mode interface
- The onboard controller is a member of the Epson S1D15605 Series family with an integrated display data RAM

3.8 Debug/Development Interfaces

There are two separate debug ports (for pinouts see Section 4.7, “Debug/Development Connectors”). A 20-pin connector is provided for a standard JTAG debug interface. This a lower cost option that only requires a simple interface cable to connect to the PC and uses standard ARM software development tools.

A separate 38-pin Mictor connector is uniquely provided on this module to support the extended capability Nexus real-time debug interface for the ARM processor.

3.9 Audio Subsystem

The audio subsystem provides means for simple output sounds/tones or for TELCO voice quality audio.

- A 2.5mm stereo jack is provided to interface to a typical telephone-type headset with an electret microphone and a single earphone.
- Audio input - The audio input is taken from the headset electret microphone (mic).
  - An onboard 10 k-ohm resistor circuit biases the mic for an ~1 Vdc operating voltage.
  - The mic AC signal is filtered and amplified through a active low-pass filter with a voltage gain of about 30 (~30 dB). The filter topology is a multiple feedback (MFB) 3-pole, linear phase design. The target cutoff frequency is 3.6 kHz. The filter is intended as an anti-aliasing filter for sampled data.
  - The input amplifier output is sampled via the onboard MC1322x ADC. The sampling frequency is programmable.
- Audio output source - The audio output can be sourced from both a serial 10-bit DAC and a PWM timer output.
  - The 10-bit serial DAC uses the SSI port to send provide the digital sample data.
  - The PWM timer output is typically modulated to create a Class-D amplifier. Secondarily, a simple 50% duty cycle signal can provide simple tones.

  - The audio output source is jumper selectable via J10
- Audio output processing - The DAC or PWM out signal is filtered through an active 2-pole LPF. From the filter the signal passes through a passive attenuator, and then is amplified and driven to either an on-board speaker or the headset earphone.
  - The attenuator provides a volume control that is controlled via a software programmable, linear 32-tap non-volatile digital potentiometer. The interface to the potentiometer is the I^2C port.
  - The onboard speaker is automatically disconnected if a headset is plugged-in.

3.10 GPIO Connector

The GPIO connector (J2) provides a number of data interfaces and GPIO for external system expansion, Section 4.9, “GPIO Connector” gives details.

- A number of the GPIO are shared with the LCD interface. User should take care to avoid conflict and may have to disable the LCD to use some GPIO or ports.
- Power supply voltage is provided
  - Current draw should be limited to 50 mA.
  - A separate regulated voltage can be enabled.
- Provision is made to supply an external reference clock if desired.

3.11 Clocks

The 1322x Network Mode provides for two system clock sources.

- MC1322x Reference Oscillator - The default frequency for the reference oscillator is 24 MHz and the mounted crystal X1 is a 24 MHz device that meets MC1322x specifications. There are two additional options for the module
  - X1 can be replaced by 13-26 MHz crystal (it must meet MC1322x specifications), however, the onboard PLL must be used in this case. The PCB provides for PLL filter components, but these are not populated. See the MC1322x Reference Manual for more information on using a non-default reference frequency.
  - An external clock source can be supplied as the reference source (typically 24 MHz). The frequency must accurate to +/-40ppm. The external clock source is supplied through GPIO Connector J2, and crystal X1 must be removed and capacitor C58 mounted (see Chapter 5, “Schematic, Board Layout, and Bill of Material”, Sheet 1).
- 32.768 kHz Crystal Oscillator - Provision is also made for an optional secondary 32.768 kHz crystal X2. This oscillator can be used for a low power accurate timebase. The module comes without this crystal and its load capacitors C7 and C12 unmounted (see Chapter 5, “Schematic, Board Layout, and Bill of Material”, Sheet 1).

Chapter 4
Interface Locations and Pinouts

This chapter provides a description of the interface location and pinout of the 1322x Network Node PCB.

4.1 Overview

This chapter provides the locations (as shown in Figure 4-1) and descriptions of switches, jumpers, and connectors on the 1322x Network Node PCB. Users should reference the figures in the subsequent sections while moving through this chapter and reference the circuit board schematic in Chapter 5, “Schematic, Board Layout, and Bill of Material”, for additional information.

NOTE

The MC13226 version board has a “13226-NCB” label located between the LCD and pushbutton switch array.

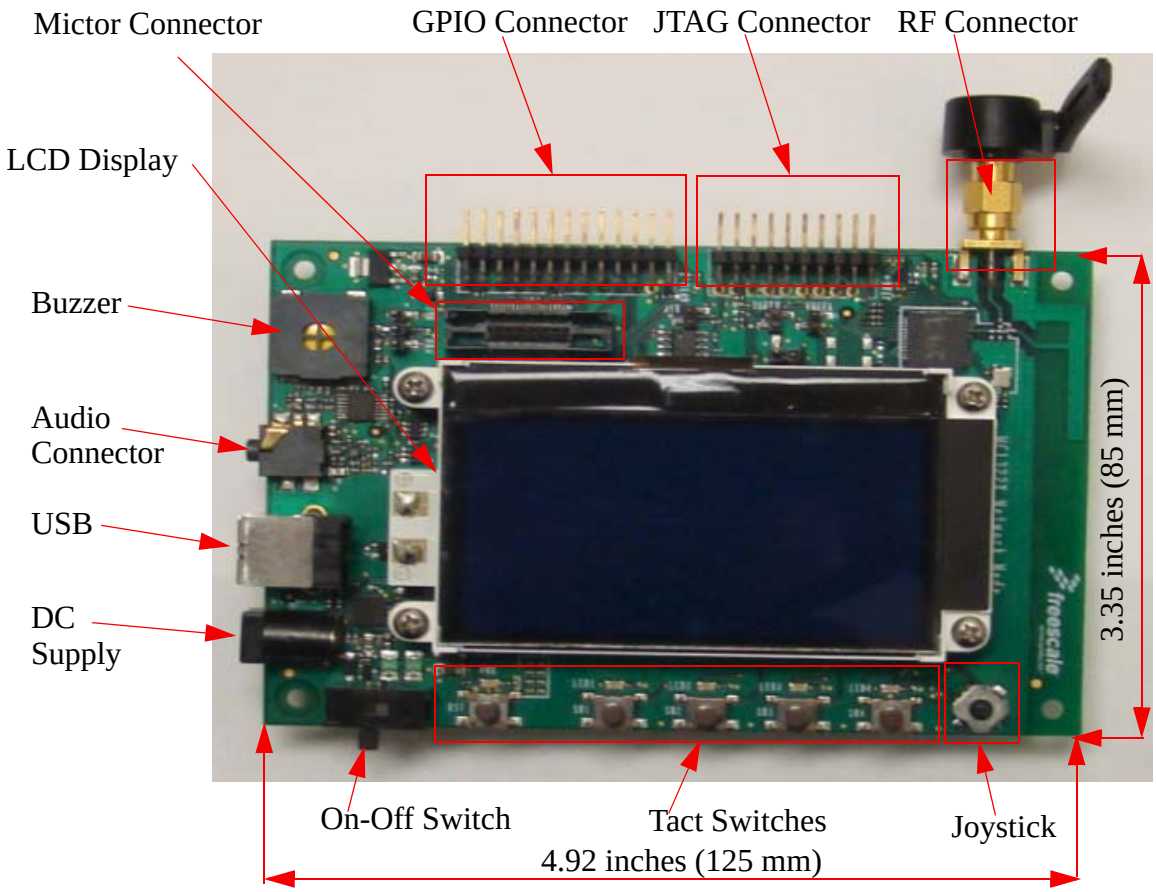

Figure 4-1. Network Node PCB Top View

4.2 Power Management

The module can be powered from the DC power jack, the USB port, or the battery pack.

4.2.1 Supply Sources

Table 4-1 lists the supply sources, connectors, and voltages. Board maximum current draw is rated at 100 mA.

Table 4-1. Power Supply Sources

Source	Connector	Min (Volts)	Typical (Volts)	Max (Volts)	Notes
DC Source	J5	4.4	5	12	Use DC only source. The connector is a 2 mm DC power jack; positive center conductor.
USB	J6	4.4	5	5.25	Series “B” receptacle connector
AA Battery Pack	BC1	~2.0	3	3.2	Two AA cells. Battery pack is automatically disabled by either DC source or USB. Accessible through the door on the bottom of the plastic enclosure.

4.2.2 On/Off Switch and Power On Indicator

The following are used with the power management:

- Switch SW7 - 4-pole slide switch disconnects all sources
- Green LED D5 - indicates power from any source

4.2.3 Power Measurement

It is possible to isolate various circuit blocks to measure current draw via 0-ohm resistors. The resistors are all mounted as default.

Below is a list of the supplies.

- R68 -> VCC (Output from on-board regulator)
- R65 -> VBATT (Supply for 1322x)
- R80 -> V_DIS (Supply for display circuit)
- R43 -> V_AUD (Supply for audio circuit)
- R64 -> 3V (Output from on-board regulator for GPIO customer access), or alternately, R66 (not mounted) can enable separate regulator U12.

4.3 RF Circuitry

The external antenna is connected via the provided SMA connector (J7).

NOTE

Only the provided Antenova® antenna (model Titanus) should be used with this module. This RF design has been certified with this antenna.

Figure 4-2. Antenova® Titanus Model Antenna

4.4 USB Connector ("B" Receptacle)

The USB connector is designated as J6. Figure 4-3 shows the connector pinout.

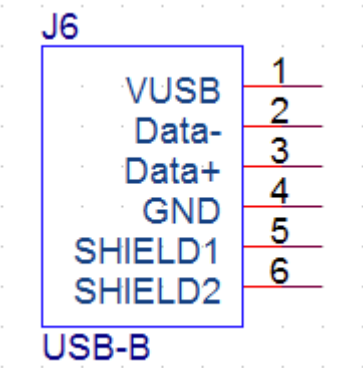

Figure 4-3. USB Connector Pinout

4.5 LEDs, Switch, Buttons and Joystick

The Network Node contains a total four red LEDs and one green LED

- The four red LEDs are driven by the MCU and controlled by the software application.
- As previously stated, the green LED is directly connected to the on-board regulator and acts as a "Power On" indication.

As also previously stated, SW7 is an on/off slide switch that connects the power supplies.

There are five pushbuttons total.

- One pushbutton (SW5) is separate and provides a master hardware Reset.
- Four additional pushbuttons are connected to the MCU GPIO for software application. These buttons all have interrupt generation capability

A joystick (SW6) is also provided.

- The joystick is a 4-direction TACT Switch with Center Push.
- The 4-directional TACT switches are connected in parallel with the four user pushbuttons.
- The center push switch is separate and does not have interrupt generation capability

Table 4-2. Switch and LED Summary

Item	GPIO Connection	Feature
PWR (green)	VCC	‘Power On’ indication
LED1 (red)	KBI_1	Application specific
LED2 (red)	KBI_2	Application specific
LED3 (red)	KBI_3	Application specific
LED4 (red)	TX_ON	Application specific
SW1 (pushbutton)	KBI_4	Interrupt functionality. In parallel with SW6 (right).
SW2 (pushbutton)	KBI_5	Interrupt functionality. In parallel with SW6 (down).
SW3 (pushbutton)	KBI_6	Interrupt functionality. In parallel with SW6 (left).
SW4 (pushbutton)	KBI_7	Interrupt functionality. In parallel with SW6 (up).
SW5 (RST)	RESETB	HW reset
SW6 (right)	KBI_4	Interrupt functionality. In parallel with SW1.
SW6 (down)	KBI_5	Interrupt functionality. In parallel with SW2.
SW6 (left)	KBI_6	Interrupt functionality. In parallel with SW3.
SW6 (up)	KBI_7	Interrupt functionality. In parallel with SW4.
SW6 (center)	KBI_0_HST_WK	Host wake up output functionality. No interrupt functionality

4.6 LCD Connector

The LCD module is connected to the main circuit board via a 30-conductor flat flex cable (FFC) with 0.5 mm spacing. The main board connector is an FFC, Right Angle Dip, zero insertion force (ZIF), 30 pin connector (J13).

NOTE

The LCD connector is a ZIF unit. Be sure to release the connector before trying to connect or disconnect the LCD FFC to the PCB.

4.7 Debug/Development Connectors

4.7.1 ARM JTAG Interface Connector

The MC1322x supports connection to a subset of the defined ARM JTAG connector. The JTAG interface is a standard 2.54mm/0.1inch spacing, 20-pin debug interface (J1). The 20-pin connector is clearly separated from the GPIO pin header (J2) and located at the rear side of the module. The 20-pin connector has Pin 1 marking for correct plug-in of the development cable.

Table 4-3 shows the device pins that are connected to the associated JTAG header pinouts if the JTAG connector is used.

Table 4-3. ARM JTAG 20-Pin Connector Assignments (J1)

Name[1]	Pin #	Pin #	Name
VCC	1	2	VCC
NC[2]	3	4	GND
TDI	5	6	GND
TMS	7	8	GND
TCK	9	10	GND
RTCK	11	12	GND
TDO	13	14	GND
RESET[3]	15	16	GND
NC	17	18	GND
NC	19	20	GND

1 NC means No Connect.
2 MC1322x does not support separate JATG reset TRST.
3 VCC through a 100k-ohm pullup.

4.7.2 Nexus Mictor Interface Connector

The MC1322x also supports connection to a subset of the defined Nexus Mictor connector. The hardware interface is a 38-pin Mictor 0.64mm/0.025inch spacing target connector (J11). Table 4-4 shows the device pins that are connected to the associated Mictor pinouts. The 38-pin MICTOR connector has a “plug security” to prevent reverse plug-in. J11 is located on the component side of the main board near the GPIO connector. The plastic box cover must be removed to use the Nexus Mictor connection.

Table 4-4. Nexus 38-Pin Mictor Connector Assignments (J11)

Name[1]	Pin #	Pin #	Name
NC	1	2	NC
NC	3	4	NC
NC	5	6	RTCK
NC	7	8	NC
VCC (pullup)[2]	9	10	EVTI_B
TDO	11	12	VCC[3]
NC	13	14	RDY_B
TCK	15	16	MDO07
TMS	17	18	MDO06
TDI	19	20	MDO05
RESET[4]	21	22	MDO04
NC	23	24	MDO03
NC	25	26	MDO02
NC	27	28	MDO01
NC	29	30	MDO00
NC	31	32	EVTO_B
NC	33	34	MCKO
NC	35	36	MSEO1_B
NC	37	38	MSEO0_B

1 NC means No Connect.
2 VCC through a 100k-ohm pullup.
3 VCC isolated by a 1k-ohm resistor.
4 VCC through a 100k-ohm pullup.

4.8 Audio Subsystem Connections

The audio subsystem uses the following connections:

- 2.5mm stereo jack J12 - for headset mic and earphone
- Jumper J10 - selects audio output source. See Figure 4-4 for connections.

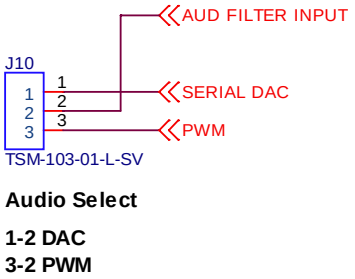

Figure 4-4. J10 Audio Output Source Jumper

4.9 GPIO Connector

The GPIO connector (J2) is a standard 2.54mm/0.1inch spacing, 26-pin header. The connector provides access to MCU GPIO, an external clock source connection, a timer output, ADC inputs, the SSI port, a UART port, the SPI port, the I^2C port, and the serial DAC output. Power is also provided on the connector.

- VCC is the main supply voltage. Current draw should be limited to 50 mA.
- CLKIN can be used to supply an external reference clock (nominally 24 MHz). The onboard crystal must be removed and an ac-coupling capacitor added.
- A number of the GPIO are shared with the LCD interface. Best practice is to disable the LCD data interface to used these signals (see Table 4-5 below).
- The serial DAC output is available at the connector. The DAC output should not be selected as the output audio source (J10) when used offboard.

Table 4-5. GPIO Connector J2 Pinouts

Pin	Name	Function	Notes
1	TMR1	Timer I/O or GPIO	Hardwired to LCD control output.
2	CLKIN	Source for external clock to reference oscillator	• 13-26 MHz reference clock with <40 ppm accuracy • Onboard crystal must be removed • Enable signal to MC1322x by adding C58, 10pF; see schematic
3	VCC	Voltage supply from module	3V output from on-board regulation
4	GND	System ground	
5	ADC1	ADC Analog Input Channel or GPIO	
6	ADC2	ADC Analog Input Channel or GPIO	Hardwired to LCD data buffer. Use Jumper J14 to disable.
7	ADC3	ADC Analog Input Channel or GPIO	Hardwired to LCD data buffer. Use Jumper J14 to disable.
8	ADC4	ADC Analog Input Channel or GPIO	Hardwired to LCD data buffer. Use Jumper J14 to disable.

Table 4-5. GPIO Connector J2 Pinouts (continued)

9	ADC5	ADC Analog Input Channel or GPIO	Hardwired to LCD data buffer. Use Jumper J14 to disable.
10	DAC_OUT	Serial DAC Output	Jumper J10 selects DAC output as audio output source
11	SSI_TX	SSI Port or GPIO	Hardwired to serial DAC
12	SSI_RX	SSI Port or GPIO	
13	SSI_FSYN	SSI Port or GPIO	Hardwired to serial DAC
14	SSI_BITCLK	SSI Port or GPIO	Hardwired to serial DAC
15	KBI_0_HST_WK		Hardwired to “center” on joystick
16	KBI_4		Hardwired to “right” on joystick and SW1
17	UART2_TX	UART2 or GPIO	
18	UART2_RX	UART2 or GPIO	
19	UART2_RTS	UART2 or GPIO	Hardwired to LCD control output.
20	UART2_CTS	UART2 or GPIO	Hardwired to LCD control output.
21	I2C_SCL	I^2C Port or GPIO	Hardwired to audio volume circuit. MAX5434L device has I^2C address 0x50
22	I2C_SDA	I^2C Port or GPIO	Hardwired to audio volume circuit. MAX5434L device has I^2C address 0x50
23	SPI_SCK	SPI Port or GPIO	Hardwired to LCD data buffer. Use Jumper J14 to disable.
24	SPI_SS	SPI Port or GPIO	Hardwired to LCD data buffer. Use Jumper J14 to disable.
25	SPI_MOSI	SPI Port or GPIO	Hardwired to LCD data buffer. Use Jumper J14 to disable.
26	SPI_MISO	SPI Port or GPIO	Hardwired to LCD data buffer. Use Jumper J14 to disable.

4.10 FLASH Memory Recovery Jumpers and Erase

The MC1322x has an onboard serial FLASH that stores the memory image that gets loaded into RAM at boot. If it becomes necessary to change or update the image in FLASH, there are two possible means of doing so:

- JTAG Debug Port - Using the JTAG debug port and the ARM debug tools, the FLASH image can be changed.
- Load new FLASH image via UART1 port -

NOTE

The 1322x Network Node provides access for UART1 through the USB connection. If users need to use UART1 with Test Tool running on a PC, they must access the UART through the USB port as a virtual COM port.

— The Freescale BeeKit IDE download provides a software tool called “Test Tool”. This application runs on a PC and can be used with a client running on the MC1322x to test the platform.

— Test Tool also has the capability to load a new image into the FLASH.

NOTE

The FLASH must first be cleared before loading a new image to FLASH.

The 1322x Network Node has two jumper sites (J19 and J20, Figure 4-5) that must be used to erase the FLASH:

1. Short Jumper J19 Pin 1 to Pin 2 with a shorting bar.
2. Short Jumper J20 Pin 1 to Pin 2 with another shorting bar.
3. Turn on power, push the reset button, and wait a few seconds.
4. Turn off power.
5. Remove the jumper shorting bars.
6. The board is now ready for boot operation.

After the FLASH is erased, the module can be loaded with a new image through the USB port using Test Tool. Refer to the *Test Tool User's Guide* as supplied with Test Tool in the BeeKit Wireless Connectivity Toolkit download.

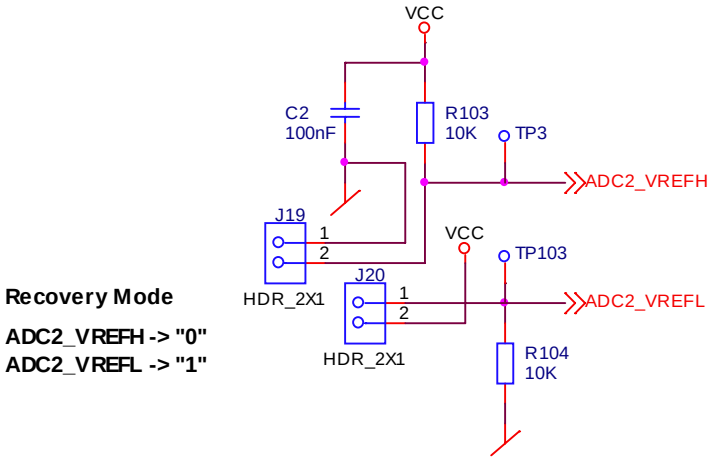

Figure 4-5. FLASH Erase Headers

4.11 ADC Voltage References

Two ADC reference voltages are provided:

- The reference voltage for ADC2_VREFH is tied to VCC which is regulated when the board is supplied from the DC source or the USB port. However, this voltage moves with VCC when power is supplied via the battery source.
- A fixed voltage reference for ADC1_VREFH is provided (see Figure 4-6).
  - The fixed voltage is 1.5 Vdc.
  - The LM285M (U17) is programmed via R120 and R121 to provide a constant reference
  - The reference can be enabled via Jumper J18.
  - This reference is useful for battery operation where a known, fixed high reference voltage for the ADC is required.

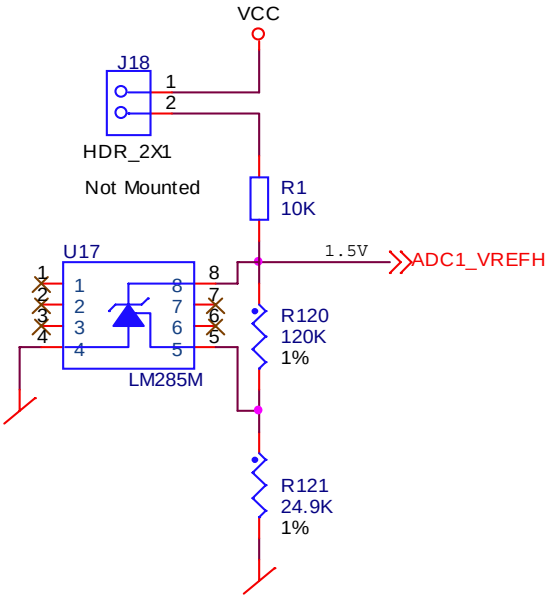

Figure 4-6. ADC Voltage 1.5 Vdc Voltage Reference

4.12 Jumper Selection

Table 4-6 lists all the possible jumper selections for the Network Node. The jumpers available on the board are as follows:

- J10 - used to select audio output source
- J14 - used to disable LCD data buffer if GPIO are used with connector J2 (GPIO Interface)
- J18 - Sets fixed ADC reference voltage
- J19, J20 - used to clear MC1322x onboard FLASH. See Table 4-6.

Table 4-6. Network Node Jumper Selection

Pin Header	Pin Number Connection	Description	Default Setting
J10	1-2	Connect to enable audio path from DAC	Not mounted
	2-3	Connect to enable audio path from PWM	Mounted
J14	1-2	Connect to disable the LCD data bus buffer	Not mounted
J18	1-2	Connect to enable ADC 1.5V reference	Not mounted
J19, J20	1-2, 1-2	Connect both to recover/clear FLASH. See Section 4.10, “FLASH Memory Recovery Jumpers and Erase”	Not mounted

Chapter 5
Schematic, Board Layout, and Bill of Material

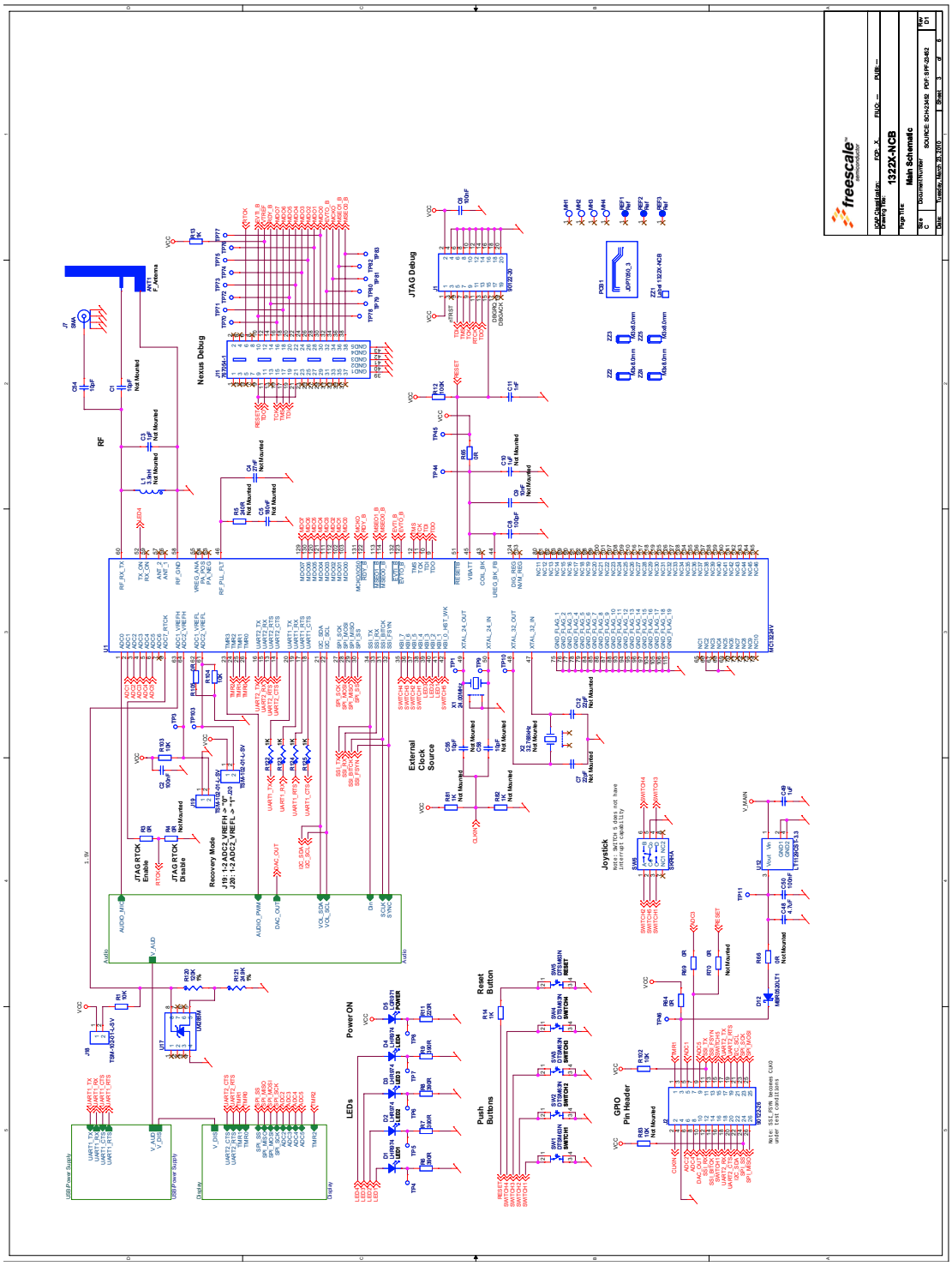

Figure 5-1. Main Schematic (1 of 4)

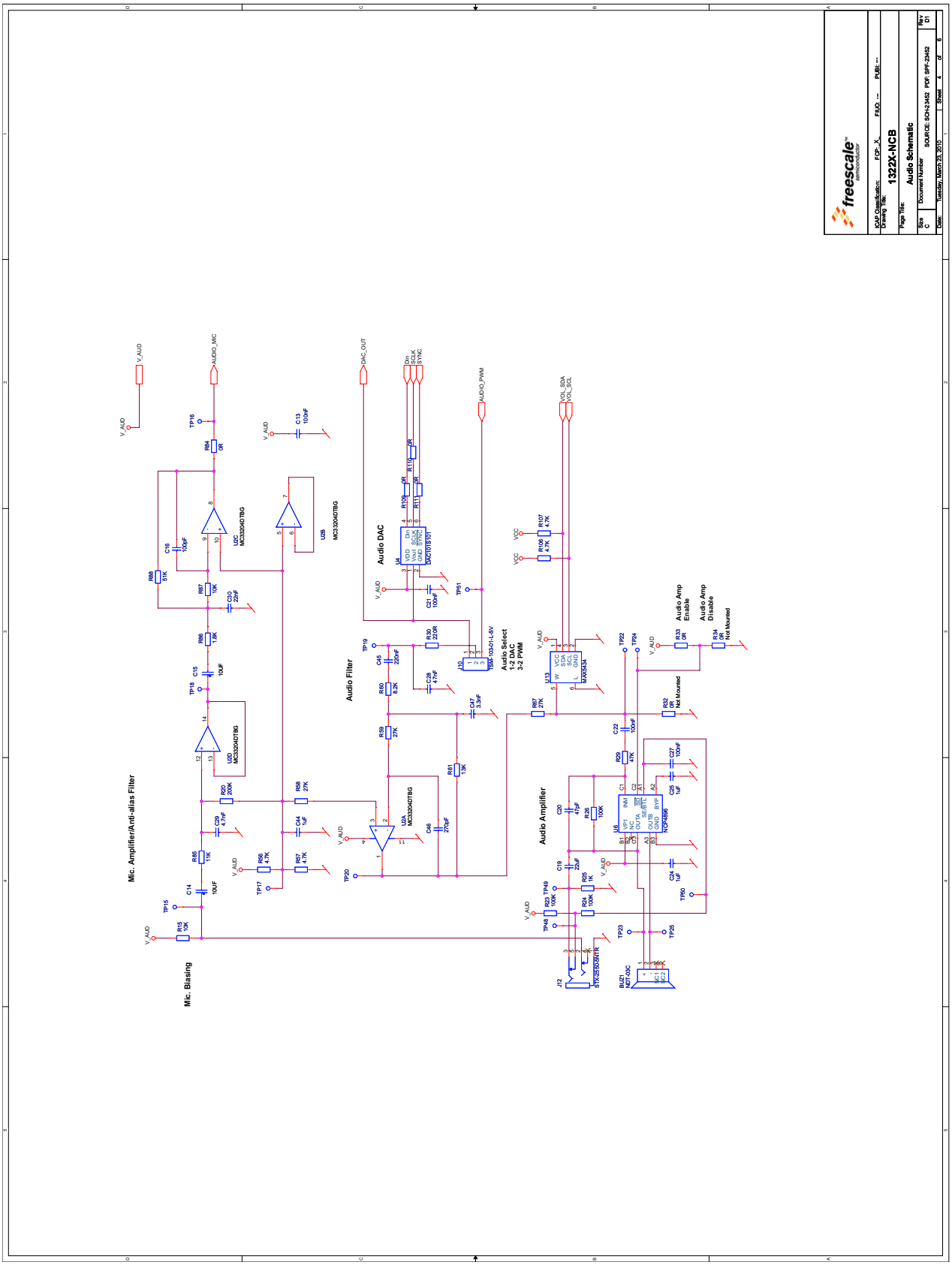

Figure 5-2. Schematic (2 of 4)

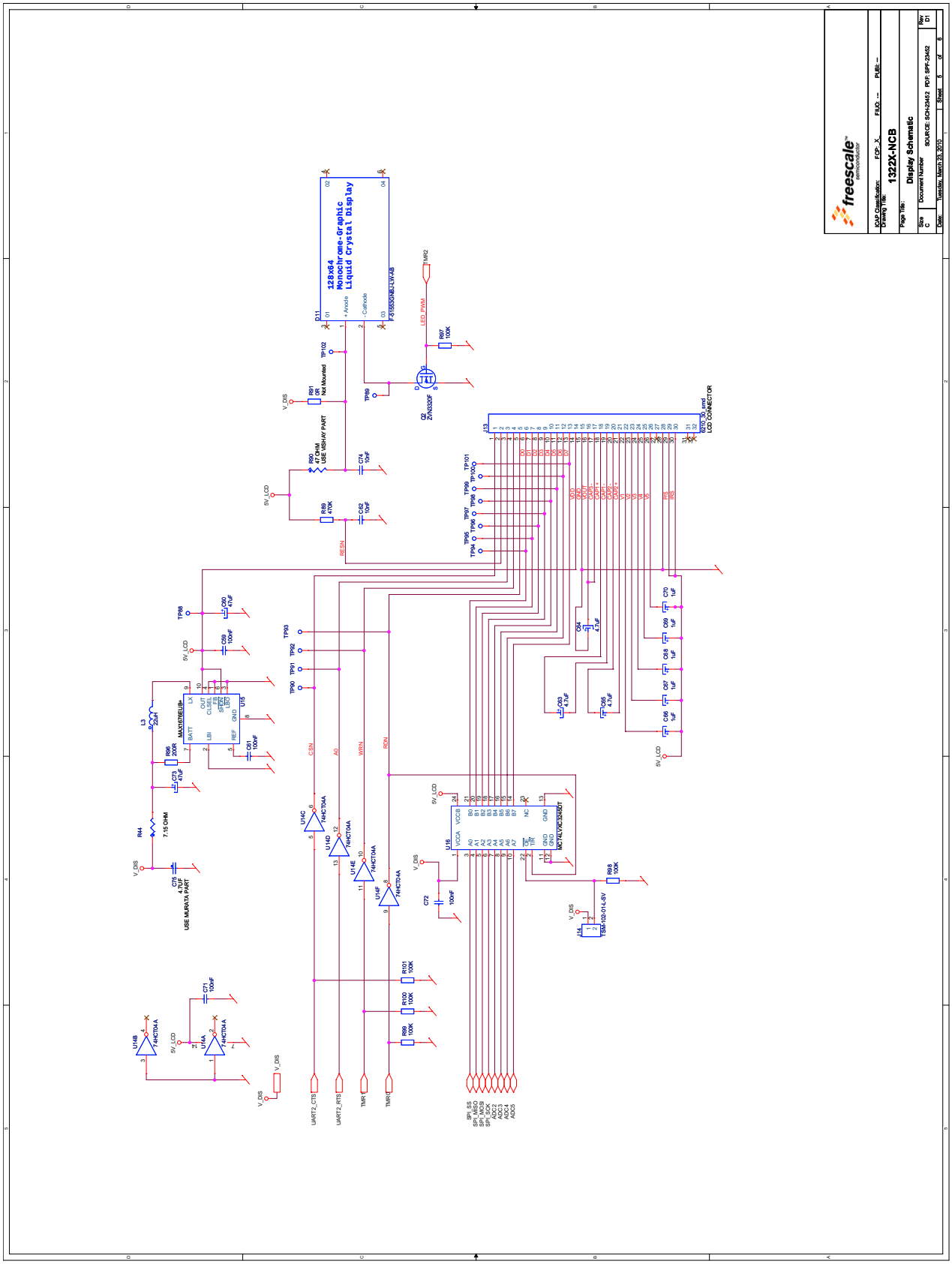

Figure 5-3. LCD Schematic (3 of 4)

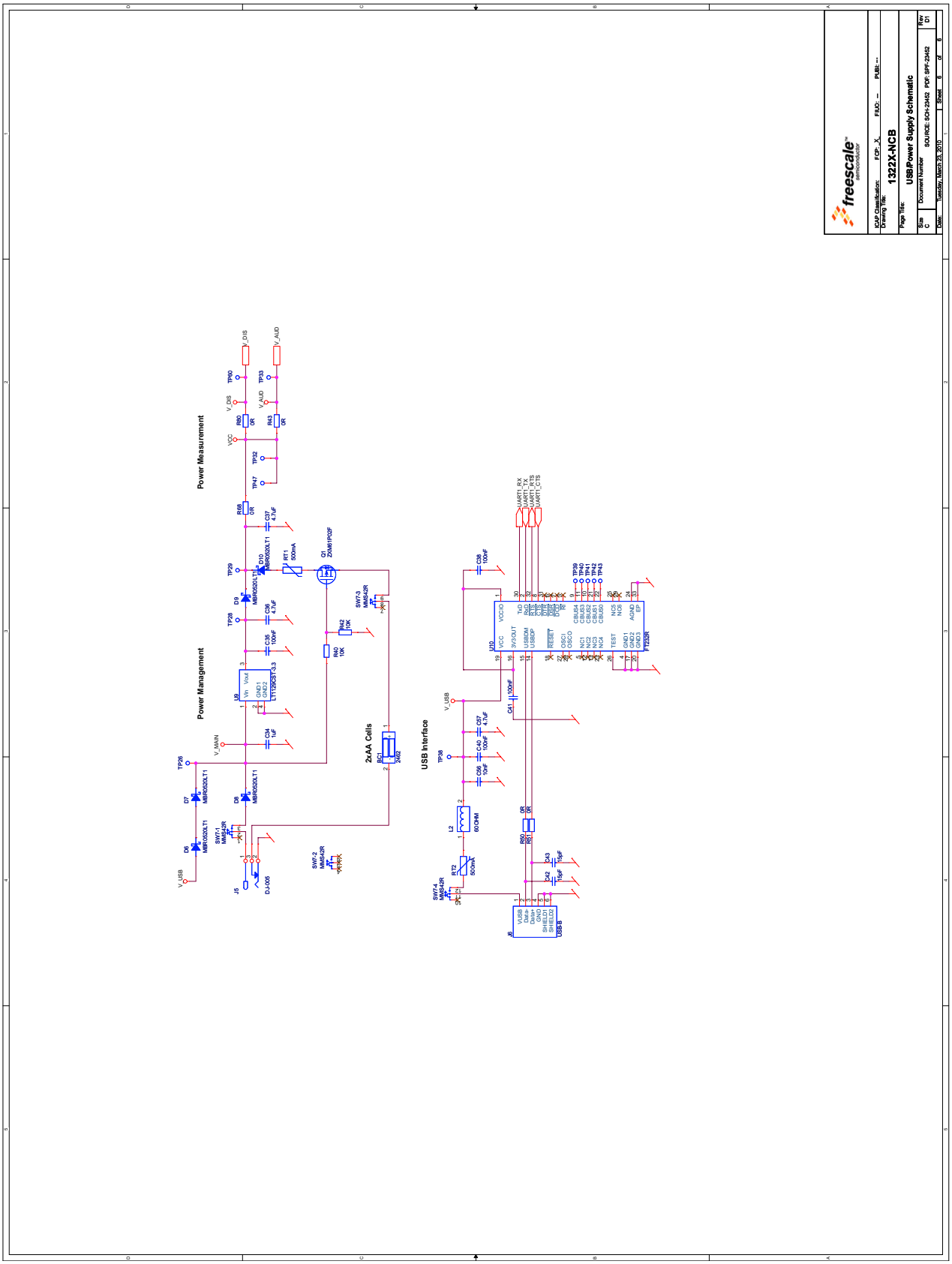

Figure 5-4. Schematic (4 of 4)

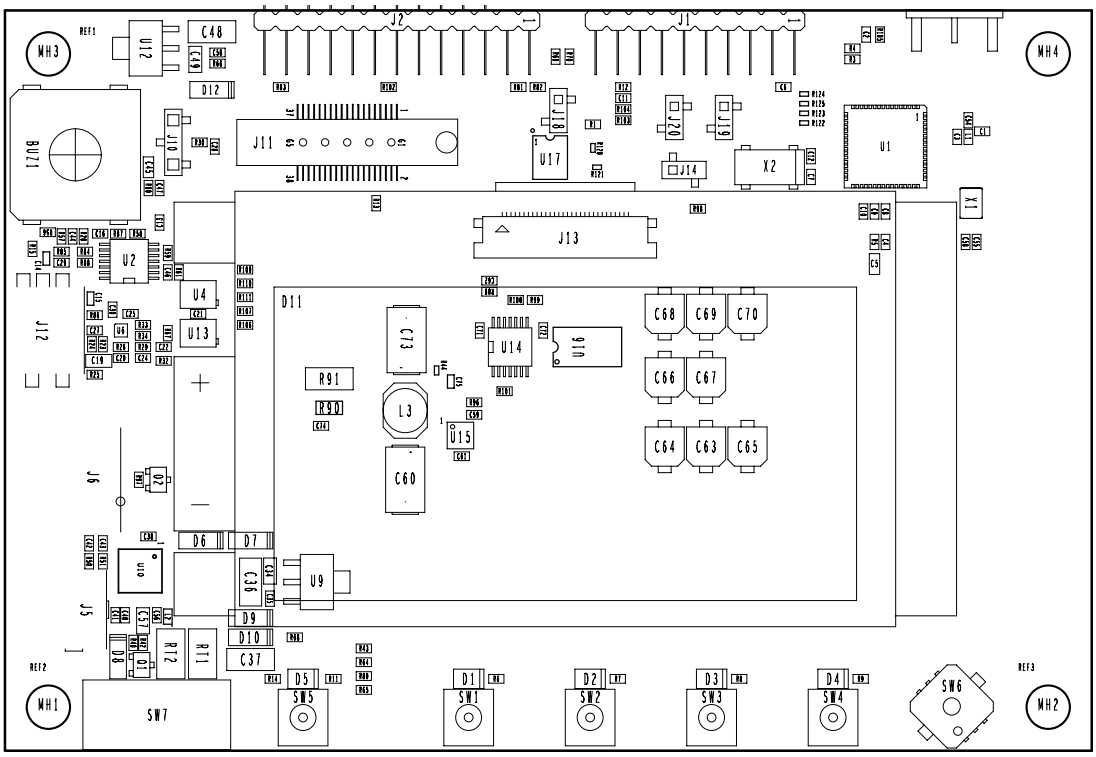

Figure 5-5. Network Node PCB Component Location (Top View)

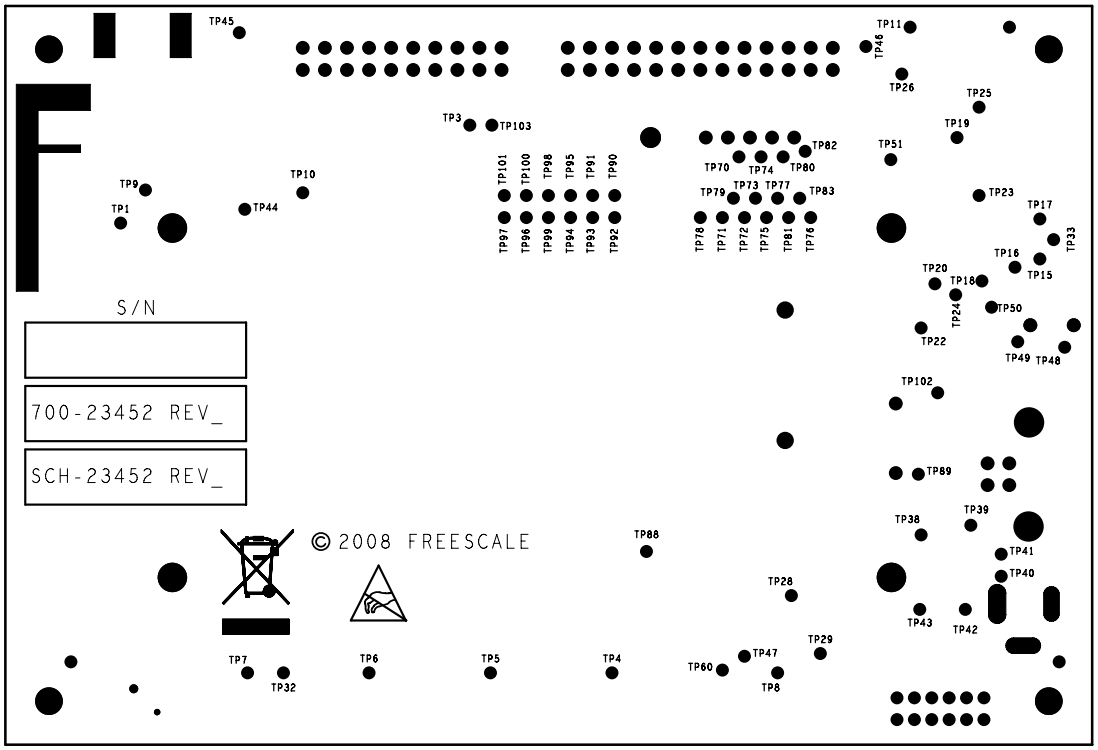

Figure 5-6. Network Node PCB Test Points (Bottom View)

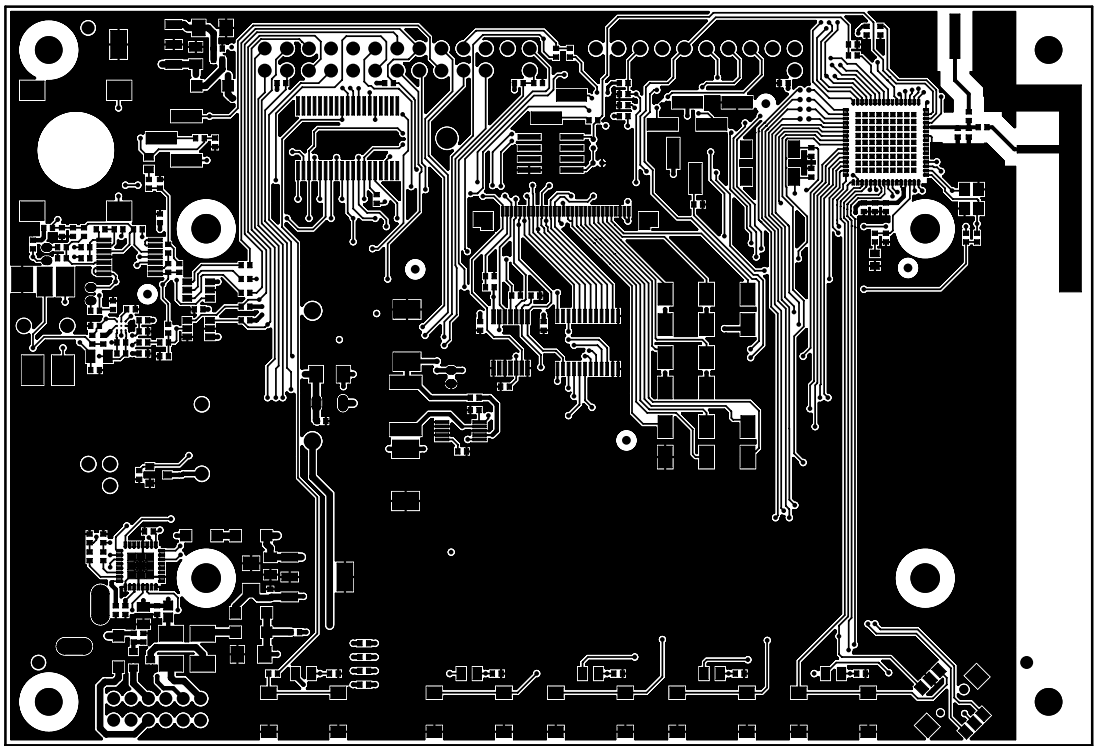

Figure 5-7. Network Node PCB Layout (Top View)

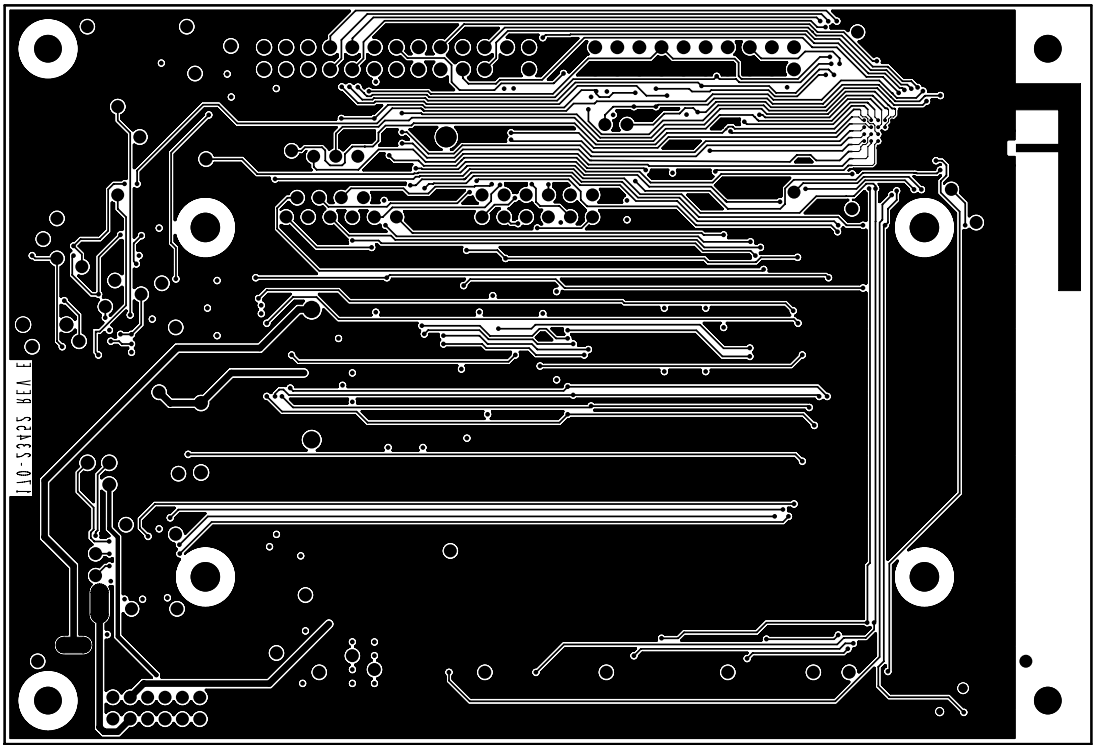

Figure 5-8. Network Node PCB Layout (Bottom View)

Table 5-1. Bill of Materials

Qty	Reference	Description	Value	Voltage	Tolerance	Manufacturer	Manufacturer Part Number
1	ANT1	F_Antenna	PCB F ANTENNA			NOT A PART	NOT A PART
1	BUZ1	SMD Speaker	NDT-03C			Star Micronics	NDT-03C
1	C54	Ceramic Capacitor C0G	10pF	50V	5%	Murata	GRM1555C1H100JZ01
0	C1,C55,C58	Ceramic Capacitor C0G	10pF Not Mounted	50V	5%	Murata	GRM1555C1H100JZ01
3	C24,C25,C44	Ceramic Capacitor X5R	1uF	6.3V	10%	Murata	GRM155R60J105KE19B
0	C10	Ceramic Capacitor X5R	1uF Not Mounted	6.3V	10%	Murata	GRM155R60J105KE19B
1	C11	Ceramic Capacitor X7R	1nF	50V	10%	Murata	GRM155R71H102KA01D
2	C14,C15	CAP CER 10UF 6.3V 20% X5R 0603	10uF	6.3V	20%	PANASONIC	ECJ1VB0J106M
1	C19	Ceramic Capacitor for smoothing X5R	10uF	10V	10%	Murata	GRM21BR61J106KE19L
15	C2,C6,C13,C21, C22,C27,C35, C38,C40,C41, C50,C59,C61, C71,C72	Ceramic Capacitor X5R	100nF	10V	10%	Murata	GRM155R61A104KA01D
1	C20	Ceramic Capacitor C0G	47pF	50V	5%	KEMET	C0402C470J5GAC
1	C28	Ceramic Capacitor X5R	47nF	10V	10%	PANASONIC-ECG	ECJ-0EB1A473K
1	C29	Ceramic Capacitor X7R	4.7nF	25V	10%	MURATA	GRM155R71E472KA01
1	C30	Ceramic Capacitor X7R	22nF	25V	10%	MURATA	GRM155R71E223KA61D
0	C3	Ceramic Capacitor C0G	1pF Not Mounted	50V	0.25pF	Murata	GRM1555C1H1R0CZ01D
2	C34,C49	Ceramic Multilayer Capacitor X7R NoPb	1uF	16V	15%	Murata	GRM21BR71C105
3	C36,C37,C48	Ceramic Multilayer Capacitor X5R	4.7uF	16V	15%	Phycomp	2222 781 13672
0	C4	Ceramic Multilayer Capacitor X7R	27nF Not Mounted	10V	5%	Vishay	VJ0402Y273JXQCW1BC
2	C42,C43	Ceramic Capacitor C0G	15pF	50V	5%	Murata	GRM1555C1H150JZ01J

Table 5-1. Bill of Materials

1	C45	Ceramic Capacitor X7R	220nF	10V	10%	Murata	GRM188R71A224KA01
1	C46	Ceramic Capacitor C0G	270pF	50V	5%	Murata	GRM1555C1H271JA01
1	C47	Ceramic Capacitor C0G	3.3nF	50V	15%	Murata	GRM155R71H332KA01
0	C5	Ceramic Multilayer Capacitor X7R	180nF Not Mounted	16V	5%	Vishay	VJ0603Y184JXJCW1BC
1	C57	Ceramic Multilayer Capacitor X5R	4.7uF	10V	10%	Murata	GRM219R61A475KE34D
2	C60,C73	Low ESR Tantal Capacitor	47uF	16V	+/-10%	AVX	TPSD476K016R150
3	C63,C64,C65	Aluminum Electrolytic Capacitor low ESR CV-GX	4.7uF	35V	20%	Sanyo	35CV4.7GX
5	C66,C67,C68, C69,C70	Aluminum Electrolytic Capacitor	1uF	50V	20%	Nic Components	NACE 1R0 M 50V 4x5,5 TR13
0	C7,C12	Ceramic Capacitor C0G	22pF Not Mounted	50V	5%	Murata	GRM1555C1H220JZ01J
1	C75	CAP CER 4.7UF 6.3V 10% X5R 0603	4.7uF	6.3V	10%	VENKEL COMPANY	C0603X5R6R3-475KNE
2	C8,16	Ceramic Capacitor C0G	100pF	50V	5%	Murata	GRM1555C1H101JZ01
3	C56,C62,C74	Ceramic Capacitor X7R	10nF	25V	10%	Murata	GRM155R71E103KA01D
0	C9	Ceramic Capacitor X7R	10nF Not Mounted	25V	10%	Murata	GRM155R71E103KA01D
4	D1,D2,D3,D4	SMD Red topled	LHR974			OSRAM	Q62702P5182
1	D5	SMD Green topled	LGR971			OSRAM	Q65110P5179
6	D6,D7,D8,D9, D10,D12	SMD Power Schottky Rectifier	MBR0520LT1	20V		On Semiconductor	MBR0520LT1G
1	J10	Single Row Straight Pin Header SMD	TSM-103-01-L-SV			Samtec	TSM-103-01-L-SV
1	J11	Mictor, Centerline Matched Impedance Connector	767054-1			AMP	767054-1
1	J12	2.5mm Audio stereo jack with switch	STX-2550-5NTR			Kycon	STX-2550-5NTR
1	J13	FFC Right Angle Dip Zif 30 pin Connector	6210_30_ smd			AVX	08 6210 030 340 800
4	J14, J18,J19,J20	Single Row Straight Pin Header SMD	TSM-102-01-L-SV			Samtec	TSM-102-01-L-SV

Table 5-1. Bill of Materials

0	J18,J19,J20	HDR 1X2 SMT 78.7MIL SP 235H AU	HDR_1X2			SAMTEC	TMM-102-01-S-S-SM
0	L1	HF Chip coil	3.9nH Not Mounted		5%	Murata	LQG15HS3N9S02D
1	L2	Chip Ferrite Bead	500mA			Murata	BLM11P600Sxx
1	L3	SMD power inductor	22uH		20%	Coilcraft	DO1608C-223LC
1	Q1	P-channel MOSFET	ZXM61P02F	20V		Zetex	ZXM61P02F
1	Q2	N-Chanel Enhancement MOSFET	ZVN3320F	200V		Zetex	ZVN3320FTA
15	R3,R33,R43, R50,R51,R64, R65,R68,R69, R80,R84,R105, R109,R110,R111	Fixed resistor RC31	0R	50V	0.063W 2%	Philips	2322 705 91002
0	R4,R32,R34,R66,R70,R91	Fixed resistor RC31	0R Not Mounted	50V	0.063W 2%	Philips	2322 705 91002
2	R11,R30	Fixed resistor RC31	220R	50V	0.063W 2%	Philips	2322 705 50221
9	R12,R23,R24, R26,R97,R98, R99,R100,R101	Fixed resistor RC31	100K	50V	0.063W 2%	Philips	2322 705 50104
3	R13,R14,R25	Fixed resistor RC31	1K	50V	0.063W 2%	Philips	2322 705 50102
0	R81,R82	Fixed resistor RC31	1K Not Mounted	50V	0.063W 2%	Philips	2322 705 50102
4	R56,R57,R106, R107	Fixed resistor RC31	4.7K	50V	0.063W 2%	Philips	2322 705 50472
9	R1,R15,R40, R42,R44,R87, R102,R103, R104	Fixed resistor RC31	10K	50V	0.063W 2%	Philips	2322 705 50103
1	R44	Fixed resistor RC31	7R15		0.063W 1%	KOA SPEER	RK73H1ETTP7R15F
0	R83	Fixed resistor RC31	10K Not Mounted	50V	0.063W 2%	Philips	2322 705 50103
1	R20	Fixed resistor RC31	200K	50V	0,063W 2%	YAGEO AMERICA	RC0402JR-07200KL
1	R29	Fixed resistor RC31	47K	50V	0.063W 2%	Philips	2322 705 50473
0	R5	Fixed resistor RC31	240R Not Mounted	50V	0.063W 2%	Philips	2322 705 50241

Table 5-1. Bill of Materials

3	R58,R59,R67	Fixed resistor RC31	27K	50V	0.063W 2%	Philips	2322 705 50273
4	R6,R7,R8,R9	Fixed resistor RC31	390R	50V	0.063W 2%	Philips	2322 705 50391
1	R60	Fixed resistor RC31	8.2K	50V	0.063W 2%	Philips	2322 705 50822
1	R61	Fixed resistor RC31	13K	50V	0.063W 2%	Philips	2322 705 50133
1	R85	Fixed resistor RC32	11K	50V	0.063W	KOA SPEER	RK73H1ETTP11 02F
1	R86	Fixed resistor RC33	1.8K	50V	0.063W	KOA SPEER	RK73H1ETTP18 01F
1	R88	Fixed resistor RC34	51K	200V	0.063W	KOA SPEER	RK73H1ETTP51 02F
1	R89	RESISTOR RC31	470K	100V	1/16W 5%	YAGEO AMERICA	RC0402JR-0747 0KL
1	R96	RESISTOR	200 OHM		0.063W	VISHAY/DALE	CRCW0402200 RJNED
1	R90	RES MF 47 OHM 1/4W 5% 1206	47 OHM		1/4W 5%	BOURNS	CR1206-JW-470 ELF
1	R120	RES MF 120K 1/16W 1% 0402	120K		1/16W 1%	KOA SPEER	RK73H1ETTP12 03F
1	R121	RES MF 24.9K 1/16W 1% 0402	24.9K		1/16W 1%	KOA SPEER	RK73H1ETTP24 92F
4	R122,R123, R124,R125	RES MF 1.0K 1/16W 5% 0402	1K		1/16W 5%	VISHAY INTERTECH-NOLOGY	CRCW04021K00 JNED
2	RT1,RT2	Polyswitch Overcurrent Protection Device	500mA	13.2V		Tyco Electronics	microSMD050F
5	SW1,SW2,SW3, SW4,SW5	SMD Tact Switch 2.6N (7.0mm)	DTSM63N			Diptronic	DTSM-63N-V-B
1	SW6	4-directional TACT switch with center push SMD	SKRHA			ALPS	SKRHAAE010
1	SW7	Miniature Slide Switch 4 pole	MMS42R			APEM	MMS42R
1	U1	ZigBee Wireless Transceiver and ARM7 processor	MC13224V or MC13226V			Freescale	MC13224V or MC13226V
1	U10	USB UART, PB-free	FT232R			FTDI	FT232RQ

Table 5-1. Bill of Materials

1	U13	Digitally Controled Potentiometer, 50Kohm	MAX5434			Maxim	MAX5434LEZT+T
1	U14	Hex inverter	74HCT04A			On Semiconductor	MC74HCT04ADTR2G
1	U15	Low supply current Step-up DC-DC Converter with shutdown	MAX1676			Maxim	MAX1676EUB+-ND
1	U16	Low Voltage CMOS Octal Bidirectional Transceiver	74LCX245			On Semiconductor	MC74LVXC3245DTG
1	U2	Dual Low voltage Op-Amp	MC33202			On Semiconductor	MC33204DTBG
1	U4	10-bit Low Power DAC with rail to rail output	DAC101S101			National Semiconductors	DAC101S101CIMK-NoPB
1	U6	Audio class AB amplifier, 1,0W	NCP4896			On Semiconductor	NCP4896FCT1G
2	U9,U12	LDO voltage regulator 3V3	LT1129CST-3.3			Linear Technology	LT1129CST-3.3
1	U17	IC VREG ADJ 1.24-5.3V 20MA SOIC8	LM285M			NATIONAL SEMICONDUCTOR	LM285M/NOPB
1	X1	Crystal SMD	24.00MHz		+-10ppm	NDK	EXS00A-CS02020 (24MHz NX3225SA) (for OA/AV and Bluetooth)
0	X2	Crystal SMD	32.768kHz Not Mounted		+-20ppm	Abracon	ABS25-32.768-12.5-2-T
1	D11	128x64 pixel monochrome display w. LED backlight	F-51553GNBJ-LW-AB			Optrex	F-51553GNBJ-LW-AEN
1	BC1	PCB Battery Holder 2xAA	2462			Keystone	2462
1	J1	Dual Row Right Angle pin header 0.38um gold	90122-20			Molex	90122-0770
1	J2	Dual Row Right Angle pin header 0.38um gold	90122-26			Molex	90122-0773
1	J5	DC Power Jack PCB, 2mm	DJ-005			Taitek	2DC-0005-D100

Table 5-1. Bill of Materials

1	J6	USB-series "B" receptacle	USB-B			AMP	292304-1
1	J7	Straight SMA Receptacle for PCB edge mounting (0.79mm PCB)	SMA			Johnson Components	142-0701-881

Chapter 6
PCB Manufacturing Specifications

This chapter provides the specifications used to manufacture the 1322x Network Node printed circuit board (PCB).

The 1322x Network Node PCB must comply with the following:

- The PCB must comply with Perfag10/3C (http://www.perfag.dk/Uk/ukindex.htm)
- The PCB manufacturer's logo is required
- The PCB production week and year code is required
  - The manufacturer's logo and week/year code must be stamped on the back of the PCB solder mask
  - The PCB manufacturer can not insert text on the PCB either in copper or in silkscreen without written permission from Freescale Semiconductor, Inc.
- The required Underwriter's Laboratory (UL) Flammability Rating
  - The level is 94V-0 (http://www.ul.com/plastics/flame.html)
  - The UL information must be stamped on the back of the PCB solder mask

NOTE

- A complete set of design files is available the 1322x Network Node at the Freescale web site (http:www.freescale.com/802154) under reference designs. It is recommended that this design or one of a number of other reference designs be used as a starting point for a custom application.
- The *Freescale IEEE 802.15.4 / ZigBee Package and Hardware Layout Considerations Reference Manual*, Document Number: ZHDCRM is also available at the same web site to provide additional design guidance.

6.1 Single PCB Construction

This section describes individual PCB construction details.

- The PCB is a four-layer, multi-layer design
- The PCB contains no blind, buried, or micro vias
- PCB data:
  - Size: Approximately 125 x 85 mm (4.92 x 3.35 inches)
  - Final thickness (Cu/Cu): 0.864 mm (0.032 inches) +/- 10% (excluding solder mask)

- The following table defines each layer of the completed PCB. The artwork identification refers to the name of the layer in commonly used terms.

Table 6-1. Layer by Layer Overview

Layer	Artwork Identification	File Name
1	Solder Resist	MASK1.art
2	Copper Top Layer	ASSY1.art
3	Copper Layer 2	ASSY2.art
4	Copper Layer 3	ASSY3.art
5	Copper bottom Layer	ASSY4.art
6	Solder Resist	MASK4.art

NOTE

The 1322x Network Node contains high frequency 2.4 GHz RF circuitry. As a result, RF component placement, line geometries and layout, and spacing to the ground plane are critical parameters. As a result, BOARD STACKUP GEOMETRY IS CRITICAL. Dielectric and copper thicknesses and spacing must not be changed; follow the stackup (see Figure 6-1) information as provided with the reference design.

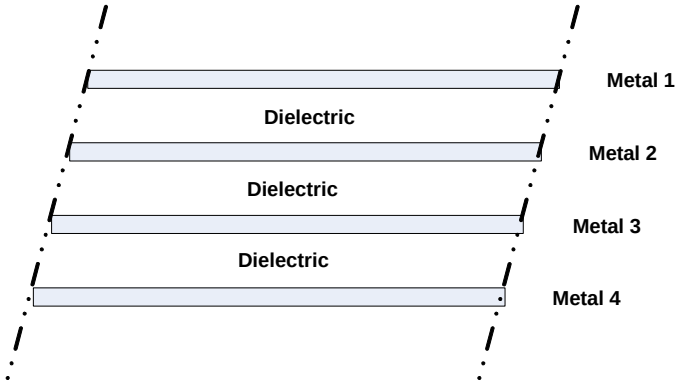

Figure 6-1. PCB Stackup Cross-Section

- Solder mask is required
- Silk screen is required

6.2 Panelization

The panel size can be negotiated depending on production volume.

6.3 Materials

The PCB composite materials must meet the following requirements:

- Laminate - The base laminate material (laminate) must be FR4. If the laminate material were changed the RF electrical characteristics may change and degrade RF performance.
- Copper Foil -
  - Top and Bottom copper layers must be 1 oz. copper
  - Interior layers must be 1/2 oz. copper
- Plating - All pad plating must be Hot Air Levelling (HAL)

6.4 Solder Mask

The solder mask must meet the following requirements:

- Solder mask type: Liquid Film Electra EMP110 or equivalent
- Solder mask thickness: 10 – 30 µm

6.5 Silk Screen

The silk screen must meet the following requirements:

- Silkscreen color: White
- Silkscreen must be applied after application of solder mask if solder mask is required
- The silkscreen ink must not extend into any plated-thru-holes
- The silk screen must be clipped back to the line of resistance

6.6 Electrical PCB Testing

- All PCBs must be 100 percent tested for opens and shorts
- Impedance Measurement - An impedance measurement report is not mandatory

6.7 Packaging

Packaging for the PCBs must be the following requirements:

- Finished PCBs must remain in panel
- Finished PCBs must be packed in plastic bags that do not contain silicones or sulphur materials. These materials can degrade solderability.

6.8 Hole Specification/Tool Table

See the `ncdrill-1-4.tap` file included with the Gerber files and the `FAB-23452.pdf` file.

6.9 File Description

Files included with the download include Design, Gerber and PDF files.

Gerber files are RS-374x format. Not all files included with the Gerber files are for PCB manufacturing.

PDF files included are assembly drawings (ASSYx), board fabrication drawing (FAB-23452), the two metal layers (LAYx), solder mask (MASKx), solder paste (PASTE1) and silk screen (SILKx). The schematic is SPF-23452_REV_x.

Design files are in Allegro format with OrCAD schematic capture.