1322x Extended Range Board

Reference Manual

Document Number: 1322xERBRM
Rev. 1.1
09/2010

How to Reach Us:

Home Page:
www.freescale.com

E-mail:
support@freescale.com

USA/Europe or Locations Not Listed:
Freescale Semiconductor
Technical Information Center, CH370
1300 N. Alma School Road
Chandler, Arizona 85224
+1-800-521-6274 or +1-480-768-2130
support@freescale.com

Europe, Middle East, and Africa:
Freescale Halbleiter Deutschland GmbH
Technical Information Center
Schatzbogen 7
81829 Muenchen, Germany
+44 1296 380 456 (English)
+46 8 52200080 (English)
+49 89 92103 559 (German)
+33 1 69 35 48 48 (French)
support@freescale.com

Japan:
Freescale Semiconductor Japan Ltd.
Headquarters
ARCO Tower 15F
1-8-1, Shimo-Meguro, Meguro-ku,
Tokyo 153-0064, Japan
0120 191014 or +81 3 5437 9125
support.japan@freescale.com

Asia/Pacific:
Freescale Semiconductor Hong Kong Ltd.
Technical Information Center
2 Dai King Street
Tai Po Industrial Estate
Tai Po, N.T., Hong Kong
+800 2666 8080
support.asia@freescale.com

***For Literature Requests Only*:**
Freescale Semiconductor Literature Distribution Center
P.O. Box 5405
Denver, Colorado 80217
1-800-521-6274 or 303-675-2140
Fax: 303-675-2150
LDCForFreescaleSemiconductor@hibbertgroup.com

Information in this document is provided solely to enable system and software implementers to use Freescale Semiconductor products. There are no express or implied copyright licenses granted hereunder to design or fabricate any integrated circuits or integrated circuits based on the information in this document.

Freescale Semiconductor reserves the right to make changes without further notice to any products herein. Freescale Semiconductor makes no warranty, representation or guarantee regarding the suitability of its products for any particular purpose, nor does Freescale Semiconductor assume any liability arising out of the application or use of any product or circuit, and specifically disclaims any and all liability, including without limitation consequential or incidental damages. “Typical” parameters that may be provided in Freescale Semiconductor data sheets and/or specifications can and do vary in different applications and actual performance may vary over time. All operating parameters, including “Typicals”, must be validated for each customer application by customer’s technical experts. Freescale Semiconductor does not convey any license under its patent rights nor the rights of others. Freescale Semiconductor products are not designed, intended, or authorized for use as components in systems intended for surgical implant into the body, or other applications intended to support or sustain life, or for any other application in which the failure of the Freescale Semiconductor product could create a situation where personal injury or death may occur. Should Buyer purchase or use Freescale Semiconductor products for any such unintended or unauthorized application, Buyer shall indemnify and hold Freescale Semiconductor and its officers, employees, subsidiaries, affiliates, and distributors harmless against all claims, costs, damages, and expenses, and reasonable attorney fees arising out of, directly or indirectly, any claim of personal injury or death associated with such unintended or unauthorized use, even if such claim alleges that Freescale Semiconductor was negligent regarding the design or manufacture of the part.

ARM is the registered trademark of ARM Limited. ARM7TDMI-S is the trademark of ARM Limited.

Freescale™ and the Freescale logo are trademarks of Freescale Semiconductor, Inc. All other product or service names are the property of their respective owners.

© Freescale Semiconductor, Inc. 2007, 2008, 2009, 2010. All rights reserved.

Contents

About This Book

Audience . . . iii
Organization . . . iii
Revision History . . . iii

Chapter 1
1322x ERB Regulatory Information

1.1 1322x ERB FCC Compliance . . . 1-1
1.2 FCC Guidelines . . . 1-1
1.2.1 Labeling . . . 1-1
1.2.2 47 C.F.R. Sec. 15.21 . . . 1-1
1.2.3 47 C.F.R. Sec.15.105(b) . . . 1-1
1.2.4 47 C.F.R. Sec.15.203 . . . 1-2
1.3 Regulatory Information For Canada . . . 1-2

Chapter 2
1322x Extended Range Board Overview and Description

2.1 Introduction . . . 2-1
2.2 Features . . . 2-2
2.3 Board Level Specifications . . . 2-4

Chapter 3
System Overview and Functional Block Descriptions

3.1 Design Overview . . . 3-1
3.2 System Block Diagram . . . 3-1
3.3 Theory of Operation . . . 3-2
3.3.1 MC1322x - MCU and IEEE 802.15.4 Transceiver . . . 3-2
3.3.2 Power Circuitry . . . 3-3
3.3.3 Clocks . . . 3-3
3.3.4 RF Circuitry . . . 3-4
3.4 Configuration of MC1322x with an External PA . . . 3-7
3.4.1 Configuration Areas . . . 3-7
3.4.2 Configuration Methods . . . 3-9
3.5 Operational Modes . . . 3-10
3.6 User Hardware Interfaces . . . 3-10

Chapter 4
Interface Locations and Pinouts

4.1 Overview . . . 4-1
4.2 Board Power . . . 4-2
4.3 RF SMA Connector (J7) . . . 4-2

4.4 Debug/Development JTAG Interface (J9) 4-2
4.5 FLASH Memory Recovery Jumpers and Erase (J8) 4-2
4.6 20-Pin User Interface (J4) 4-3
4.7 32.768 kHz External Real Time Clock Module (RX-4801 JE, U6) 4-4

Chapter 5
Schematic, Board Layout, and Bill of Material

5.1 Schematic 5-1
5.2 Board Layout 5-4
5.2.1 Layout Views 5-4
5.2.2 IC Footprint 5-6
5.2.3 Optional RF Shield 5-6
5.3 Bill of Materials 5-8

Chapter 6
PCB Manufacturing Specifications

6.1 Single PCB Construction 6-1
6.2 Panelization 6-3
6.3 Materials 6-3
6.4 Solder Mask 6-3
6.5 Silk Screen 6-3
6.6 Electrical PCB Testing 6-3
6.7 Packaging 6-3
6.8 Hole Specification/Tool Table 6-4
6.9 File Description 6-4

About This Book

This manual describes Freescale's 1322x Extended Range Board evaluation board. The 1322x Extended Range Board contains Freescale's third-generation MC1322x ZigBee platform which incorporates a complete, low power, 2.4 GHz radio frequency transceiver, 32-bit ARM7 core based MCU, hardware acceleration for both the IEEE 802.15.4 MAC and AES security, and a full set of MCU peripherals into a 99-pin LGA Platform-in-Package (PiP).

Audience

This manual is intended for system designers.

Organization

This document is organized into 6 chapters.

Chapter 1	Safety Information — Highlights some of the FCC requirements.
Chapter 2	1322x Extended Range Board Overview and Description — This chapter introduces 1322x Extended Range Board which is an IEEE, 802.15.4 compliant evaluation board based on the Freescale MC1322x device.
Chapter 3	System Overview and Functional Block Descriptions — This section provides an overview of the 1322x Extended Range Board and system block diagrams.
Chapter 4	Interface Locations and Pinouts — This chapter provides a description of the interface locations and pinout of the 1322x Extended Range Board PCB.
Chapter 5	Schematic and Bill of Materials — This chapter provides the schematic, board layout, and Bill of Materials (BOM).
Chapter 6	PCB Manufacturing Specifications — This chapter provides the specifications used to manufacture the 1322x Extended Range Board printed circuit board (PCB).

Revision History

The following table summarizes revisions to this document since the previous release (Rev 1.0).

Revision History

Location	Revision
Entire document	Reviewed for errors and revised schematic/BOM.

Definitions, Acronyms, and Abbreviations

The following list defines the acronyms and abbreviations used in this document.

ADC	Analog to Digital Converter
AES	Advanced Encryption Standard
ARM	Advanced RISC Machine
CTS	Clear to Send
DAC	Digital to Analog Converter
DMA	Direct Memory Access
I2C	Inter-Integrated Circuit is a multi-master serial computer bus
ISM	Industrial Scientific Medical 2.4 GHz radio frequency band
JTAG	Joint Test Action Group
LGA	Land Grid Array
MAC	Media Access Controller
MCU	Microcontroller Unit
NEXUS	An embedded processor development tool interface that helps design engineers identify software and hardware-level issues.
pcb	Printed circuit board
PiP	Platform in Package
PWM	Pulse-width modulation
RTS	Request to Send
SMA Connector	SubMiniature version “A” connector
SPI	Serial Peripheral Interface
SSI	Synchronous Serial Interface
TACT Switch	A switch that provides a slight “snap” or “click” to the user to indicate function.
TELCO	Telephone Company
USB	Universal Serial Bus
VCP	Virtual Com Port

Chapter 1
1322x ERB Regulatory Information

1.1 1322x ERB FCC Compliance

This reference design is for use by developers for evaluation purposes and to be incorporated into their design. Integrators are responsible for evaluating the end product (including the transmitter) and obtaining a separate FCC authorization. FCC approval of this design has not been obtained, but rather the design has been evaluated and is believed to be in compliance with FCC and other governing bodies.

1.2 FCC Guidelines

The following FCC guidelines are provided only for informational purposes, and it remains the responsibility of the product designer and manufacturer to be in compliance with all FCC requirements.

1.2.1 Labeling

FCC labels are required and typically physically located on the back of the board.

1.2.2 47 C.F.R. Sec. 15.21

The equipment must be tested and found to comply with the limits for a Class B digital device, pursuant to part 15 of the FCC Rules. These limits are designed to provide reasonable protection against harmful interference in a residential installation. The equipment can generate, use and radiate radio frequency energy and, if not properly installed and used, may cause harmful interference to radio communications.

1.2.3 47 C.F.R. Sec.15.105(b)

The equipment must comply with FCC radiation exposure limits set forth for an uncontrolled environment. The antenna(s) used for the equipment must be installed to provide a separation distance of at least 8 inches (20cm) from all persons.

The device must comply with Part 15 of the FCC Rules. Operation is subject to the following three conditions:

1. The device may not cause harmful interference.
2. The device must accept any interference received, including interference that may cause undesired operation.
3. The device is susceptible to electrostatic discharge (ESD) and surge phenomenon.

1.2.4 47 C.F.R. Sec.15.203

An intentional radiator shall be designed to ensure that no antenna other than that furnished by the responsible party shall be used with the device. The use of a permanently attached antenna or of an antenna that uses a unique coupling to the intentional radiator shall be considered sufficient to comply with the provisions of this Section. The manufacturer may design the unit so that a broken antenna can be replaced by the user, but the use of a standard antenna jack or electrical connector is prohibited. This requirement does not apply to carrier current devices or to devices operated under the provisions of Sections 15.211, 15.213, 15.217, 15.219, or 15.221. Further, this requirement does not apply to intentional radiators that must be professionally installed, such as perimeter protection systems and some field disturbance sensors, or to other intentional radiators which, in accordance with Section 15.31(d), must be measured at the installation site. However, the installer shall be responsible for ensuring that the proper antenna is employed so that the limits in this Part are not exceeded.

1.3 Regulatory Information For Canada

Class B digital apparatus must comply with Canadian ICES-003 and RSS 210, Issue 7.

Chapter 2
1322x Extended Range Board Overview and Description

Freescale provides a series of cost-effective, small footprint devices for IEEE 802.15.4 and ZigBee applications. These devices call be used with an external RF power amplifier (PA) and/or low noise amplifier (LNA) for extended range capability. To assist the user in producing a quick and successful design, Freescale supplies the 1322x-ERB which is a reference design based on the MC1322x device that demonstrates a small footprint, 4-layer extended range design that incorporates use of an external PA and a low cost printed “F” antenna. The heart of the 1322x-ERB is Freescale’s MC1322x 99-pin LGA Platform-in-Package (PiP) solution that provides a complete 802.15.4 radio, transceiver, and ARM7, 32-bit MCU.

2.1 Introduction

The 1322x Extended Range Board represents a complete IEEE 802.15.4/ZigBee wireless node reference design. The printed circuit board (PCB) has a very small form factor and emphasizes the use of a printed “F” antenna and an external PA (use of an SMA RF connector is also provided for connected RF performance measurements). In this design an external LNA is not used due to the excellent receive sensitivity of the MC1322x. A single 20-pin user interface provides different serial interfaces, MCU I/O, and power connection. A second 20-pin connector provides development and debug support through the ARM7 JTAG port.

Freescale provides the 1322x-ERB as a complete reference design with circuit schematic, bill of materials (BOM), and layout database. This reference design can be used “as-is” or can be adapted for small footprint boards for the user’s custom application.

NOTE

The 1322x-ERB design as supplied has been designed and evaluated to be capable of FCC compliance, however, it has not been through the formal FCC compliance process.

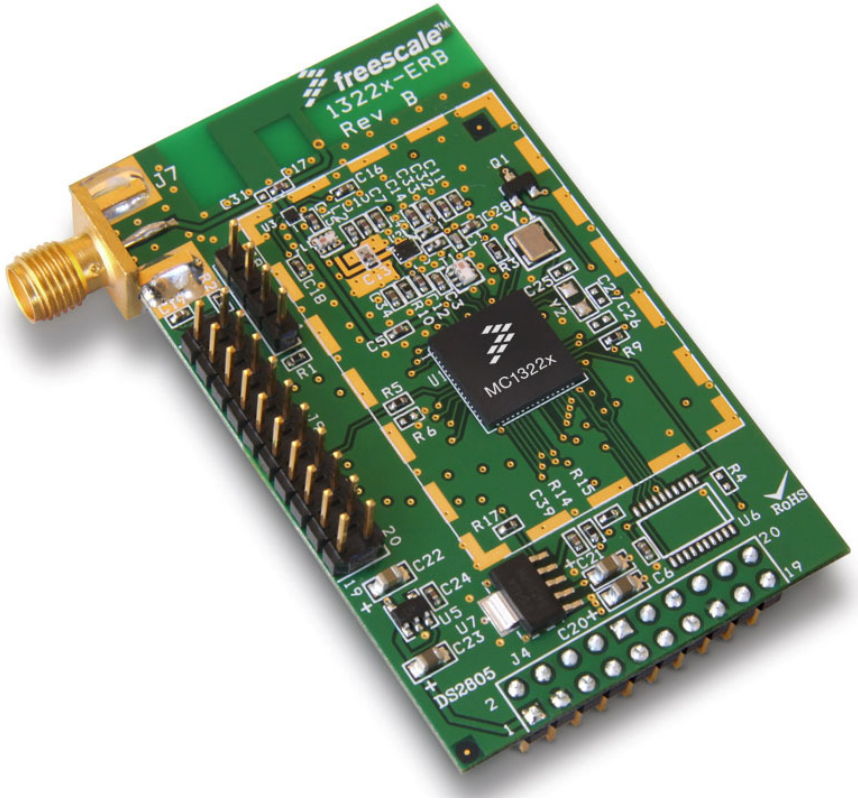

Figure 2-1. 1322x Extended Range Board

2.2 Features

The 1322x Extended Range Board provides the following features:

- Full IEEE 802.15.4 compliant wireless node; ZigBee capable with Freescale's BeeStack software stack
- Based on Freescale's third-generation MC1322x ZigBee platform which incorporates a complete, low power, 2.4 GHz radio frequency transceiver, 32-bit ARM7 core based MCU, hardware acceleration for both the IEEE 802.15.4 MAC and AES security, and a full set of MCU peripherals into a 99-pin LGA Platform-in-Package (PiP)
- Extended range RF capability
  - — MC1322x provides a bi-directional, single-ended RF port for use as the receive port or lower power TX/RX port
  - — MC1322x provides a secondary, complementary dual output PA port used with an external PA for higher output power
  - — Typical -93 dBm sensitivity (DCD receive mode)
  - — Programmable power with typical +20 dBm with PA enabled
    - – PA can be enabled for maximum power out (+20 dBm available), but still has programmable power out from -5 to +10 dBm.

  - Secondary PA bypass mode available for lower, programmable power out (-30 to +0 dBM typical)
  - MC1322x provides hardware-based, dynamic control of external RF elements.
  - Printed F-antenna
  - Optional, capacitor enabled SMA RF direct connect
  - Faraday shield footprint provided as required for FCC compliance
- 20-pin connector for standard JTAG debug/development interface
- Power management circuitry
  - Powered from the 20-pin J4 user interface
  - LDO series regulator provides 3.3 Vdc to MC1322x
  - Separate LDO series regulator provides ~2.2 Vdc to PA
  - Low power mode control for external RF circuitry provided (LDO regulator included)
  - Design can be modified for battery operation
- 20-pin J4 user header for selected General Purpose Input Output signals and data interfaces
  - SPI serial port
  - UART serial port with flow control
  - Hardware reset input
  - ADC input
  - Timer IO pin
  - 4 KBI signals
- System clock options with support for WiHart and ISA100 oscillator requirements
  - Uses default 24 MHz crystal reference oscillator for MC1322x
  - Options for 32.768 kHz oscillator for very accurate real-time delays (not mounted)
    - Standard 32.768 kHz crystal
    - 32.768 kHz TCXO for highest accuracy - required by WiHart and ISA100 protocols.
- Freescale provides a platform configuration file for use with BeeKit™ - supports 1322x-ERB with control of external RF components and the onboard radio and allow software development on the platform.

2.3 Board Level Specifications

Table 2-1. 1322x Extended Range Board Specifications

Parameter				Units	Notes/Conditions
	MIN	**TYP**	**MAX**		
General					
Size (PCB: X, Y)			38.1 x 63.5 1.5 x 2.5	mm inches	
Layer build (PCB)		0.8 0.034		mm inches	4-Layer
Dielectric material (PCB)					FR4
Power					
Voltage supply (DC)	3.5	5	15	V	
Current consumption Transmit (PA enabled @ +20 dBm) Transmit (PA disabled @ 0 dBm) Receive (DCD Mode) Receive (NCD Mode)		 220 29 22 25		 mA mA mA mA	
Temperature					
Operating temperature (see note)	-20	+25	+85	°C	
Storage temperature	**-30**	**+25**	**+85**	**°C**	
User Interfaces					
I/O interface & power port					20-pin header supports serial SPI port, I2C port, UART port, analog ADC input, GPIO, and supplies power to board (See Section 2.4.2, “I/O Interface & Power Port”)
JTAG debug port					Standard 20-pin programming & debug port
RF					
802.15.4 Frequency range	2405		2475	MHz	Lower 15 of 16 channels in the 2450 MHz band with PA enabled
Range (outdoor / line of sight)		1200		Meter	<1% PER for 20-byte packets (point-to-point in communications
RF Transmitter					
802.15.4 Output power	-30	0	+21	dBm	Programmable, including bypass mode. **Note:** On channel 26, output MC1322x power should not exceed -4 dBm (power setting 0x0E) to meet FCC Part 15 requirements.
Harmonics 2nd harmonics 3rd harmonics			 -38 -35	 dBm dBm	Harmonics are compliant to ETSI and FCC regulatory approval standards

Table 2-1. 1322x Extended Range Board Specifications (continued)

Parameter				Units	Notes/Conditions
RF Receiver					
802.15.4 sensitivity DCD Mode NCD Mode (25 mA RX Current)		 -93 -95		 dBm dBm	<1% PER for 20-byte packets
Regulatory Approval					
FCC					Capable of compliance[1] with FCC part 15 standard
Environment					
RoHS					Capable of compliance[1] with the EU Directive 2002/95/EC of 27 January 2003

[1] This design is capable of compliance with the referenced standard, but Freescale does not guarantee nor assume responsibility for a user's compliance to referenced standard.

Chapter 3
System Overview and Functional Block Descriptions

This section provides an overview of the 1322x Extended Range Board and block diagrams.

3.1 Design Overview

The 1322x-ERB design is intended to showcase use of Freescale's MC1322x 99-pin LGA Platform-in-Package (PiP) in an extended range design. Because the MC1322x exhibits excellent receive sensitivity of -96 to -100 dBm, the RF design incorporates an external PA, but no LNA. In addition to the PA, a separate LDO voltage regulator is used for the PA, and an antenna switch and balun are also required. As is typical with many Freescale designs, a plated-metal "F"-antenna is used for good performance with lowest cost.

In addition to being an example of an extended range design, the 1322x-ERB has the following additional benefits:

- The selected PA for this design and the separate LDO regulator were used to allow lower operating voltage (1.8-2.2 Vdc) for the PA for potential battery operation.
- Very low power shutdown of the RF circuitry (including the LDO) is provided for potential battery operation.
- The optional 32.768 kHz oscillator has the capability of a separate, very accurate TCXO as required by the WiHart and ISA100 wireless protocols.

The design (circuitry and layout) may be used directly in a customer's target design. Freescale provides a complete design base including hardware reference manual, data sheets, circuit schematic, BOM, and layouts as well as software support for customer use.

3.2 System Block Diagram

Figure 3-1shows the 1322x Extended Range Board system level block diagram.

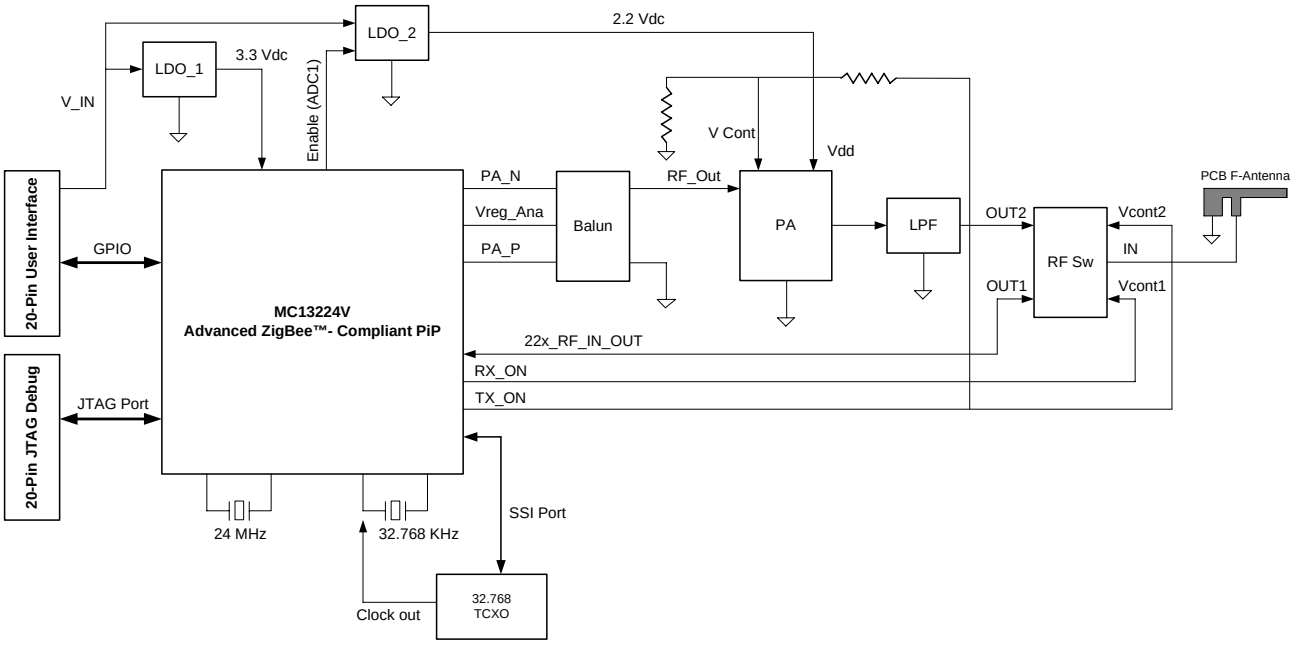

Figure 3-1. 1322x Extended Range Board Block Diagram

3.3 Theory of Operation

This section provides design information on the various elements of the design.

3.3.1 MC1322x - MCU and IEEE 802.15.4 Transceiver

The MC1322x is a single package (PiP) device that contains an ARM7 MCU, SRAM, NVM, and transceiver. All control is done through this part and it also provides the radio function and RF control. In this design:

- The operating voltage VBatt is 3.3 Vdc supplied from the primary LDO regulatory (LDO_1 in Figure 3-1)
- Application software load and debug capability is provided via the JTAG debug port
- User hardware interface to the device is provided by the 20-pin user interface port
- The primary clock source is provided by the 24 MHz crystal reference oscillator (24 MHz crystal shown in Figure 3-1)
- The MC1322x radio provides the RF interface to the external RF circuitry, and IO provide hardware control of the external RF circuitry

3.3.2 Power Circuitry

The primary power supply input V_IN is supplied via the user interface port. V_IN supplies two LDO series regulators in parallel, i.e., LDO_1 and LDO_2 (in Figure 3-1).

- LDO_1 (LP2985AIM5-3.3, U5) supplies a regulated 3.3 Vdc to the MC1322x and the optional 32.768 kHz TCXO. This LDO has a lower current rating (150mA max) because the peak current for the MC1322x is typically 30-35 mA.
- LOD_2 (REG104GA-A_DCQ, U7) supplies a regulated ~2.2 Vdc in this design (output voltage is selectable via external resistors). The required current load for the PA can be 130 mA or more.
- The LDOs are not wired in series so that LDO_1 is not required to supply the heavy PA current load in addition to the MC1322x current load
- The common input voltage range is 3.5 Vdc - 15 Vdc
- LDO_2 is enabled/disabled via GPIO signal ADC1 from the MC1322x
- The design can support battery operation down to ~2.4 Vdc V_IN if LDO_1 is eliminated and the design is powered directly from the battery.
  - The usable input voltage range for V_IN becomes 2.4-3.6 Vdc.
  - Since battery voltage changes over time, TX_ON cannot directly drive the VCONT signal through a resistor divider as shown in the existing design. VCONT to the PA should be derived from the regulated 2.2 V from LDO_2 through an external transistor switch driven from ANT_2.

3.3.3 Clocks

The 1322x-ERB has provision for two clock sources.

- MC1322x Reference Oscillator - The default frequency for the reference oscillator is 24 MHz and the mounted crystal Y1 is a 24 MHz device that meets MC1322x specifications.
- Optional 32.768 kHz Oscillator - This oscillator can be used for a low power, very accurate timebase. Provision for this oscillator supports one of two configurations
  - 32.768 kHz crystal (Y2) - the first option is a standard crystal. See the MC1322x Data Sheet for required crystal specifications. Also, external load capacitors must be mounted with the crystal
  - 32.768 kHz External Real Time Clock Module (RX-4801 JE, U6) - Some software protocol stacks such as the WiHart and ISA100 Standards require a very high stability time base. The 1322x-ERB provides mounting capability for the Epson Toyocom RX-4801 JE DTCXO module. When provided, the module drives the MC1322x 32.768 kHz oscillator externally and the crystal is not used.
    - +/- 1.9 x 10^{-6} to +/- 5.0 x 10^{-6} available stability
    - Provides wake-up interrupt capability
    - Programmed via a serial interface - the MC1322x drives the serial interface via its SSI Port. The SSI port must be programmed to support the serial protocol.

NOTE

Freescale does not supply a software driver for this clock module. That is left to the user.

3.3.4 RF Circuitry

The 1322x-ERB RF circuitry is shown in Figure 3-2; refer to the figure for the following discussion. The MC1322x has its RF analog and control signals located on Pins 52-60 (a simplified symbol for the MC1322x, U1 is shown in Figure 3-2). The use of the RF interface can be described generally by function.

NOTE

The descriptions of the RF circuitry are meant to convey a general understanding of the signal flow and function, but are not intended to provide a complete design reference.

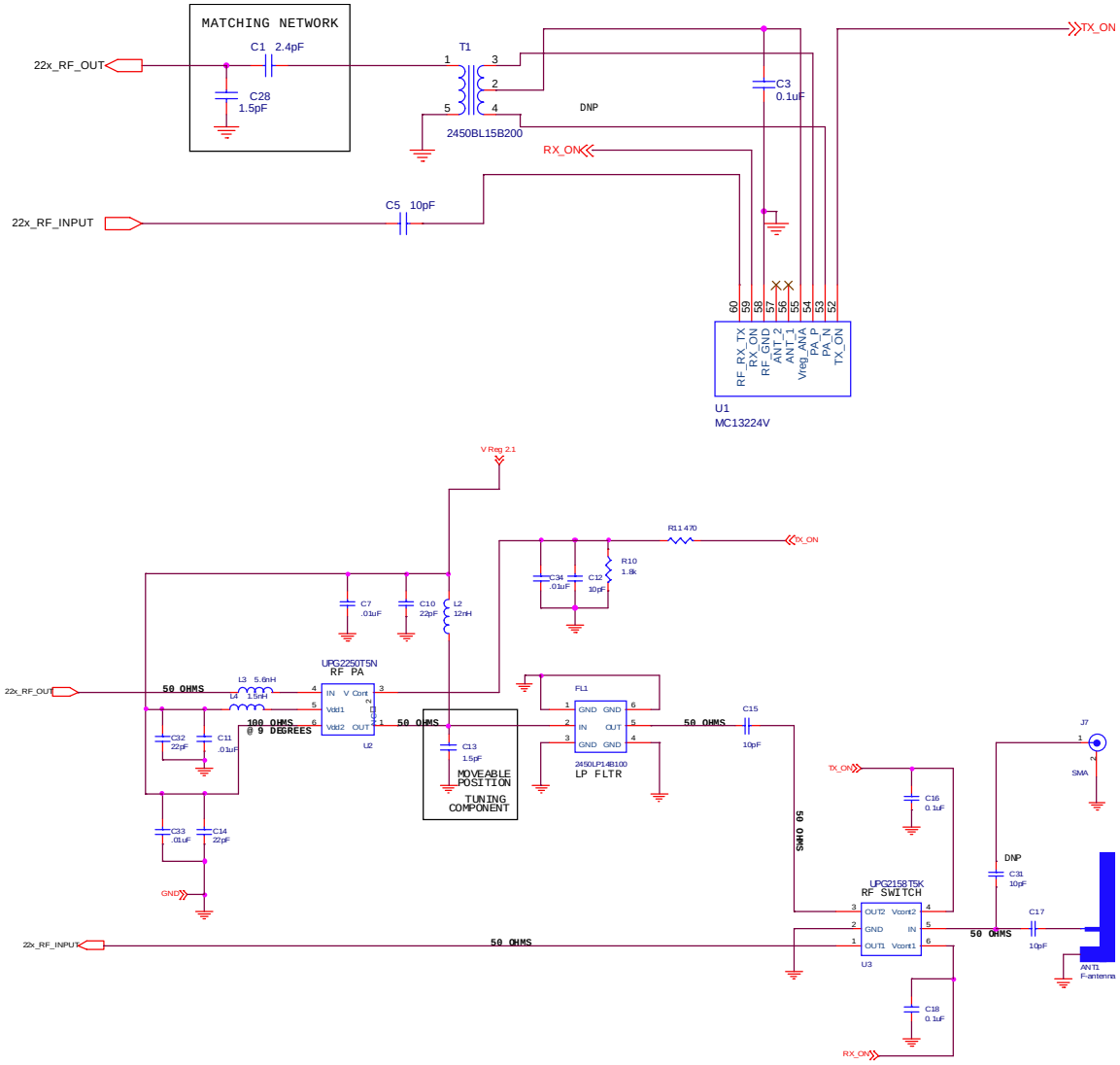

Figure 3-2. 1322x-ERB RF Circuitry

3.3.4.1 Transmit Path with External PA

The MC1322x has a secondary set of differential complementary TX PA outputs designated PA_P and PA_N. These drive a 200/50 Ω (bal./unbal.) balun T1 (2450BL15B200) which in turn feeds the single-ended path to the PA. The dc bias for the balun center tap is supplied by the Vreg_ANA pad (1.8 Vdc).

The output of balun T1 drives a simple capacitive matching network formed by capacitors C1 and C28. The output of the matching network designated as signal 22x_RF_OUT in the figure then drives the PA (UPG2250T5N, U2) input net through inductor L3.

The PA module has the following usage considerations:

- Vdd to the device is directly supplied from the 2.2 Vdc LDO.
- Vdd1 is filtered by the L4, C11, and C32 network
- Inductor L3 appears in-line with RF signal from the balun (22x_RF_OUT) to the PA input
- Inductor L2 provides dc bias to the PA output from the 2.2 Vdc
- The PA is enabled and gain is determined by the Vcont control voltage.
  - The control voltage is supplied from a resistor-divider network driven by control signal TX_ON
  - When Vcont = 0, the PA is disabled and current is 5 µA max
  - When Vcont = 2.2 Vdc (TX_ON enabled high through resistor divider), the PA gain is typically +24 dB and Idd is typically 160 mA

The PA output drives a 2.4 GHz ceramic low-pass filter (LPF) designated as FL1. The LPF is to eliminate out-of-band spurious and harmonic signals. The LPF, in turn, feeds the antenna switch.

The RF antenna switch (UPG2158T5K, U3) multiplexes the antenna feed signal (port IN) between the PA output path and the receive/bi-directional path.

- For PA transmit, port OUT2 must be enabled by the MC1322x control signal TX_ON (active high)
- For receive/bi-directional operation, port OUT1 must be enabled by the MC1322x control signal RX_ON (active high)
- TX_ON and RX_ON should not be enabled simultaneously

For PA transmit, the antenna switch port normally drives the pcb F-antenna. Alternatively, an SMA RF connector can be mounted and connected via a capacitor position change (C31) for connected measurements using RF test equipment.

3.3.4.2 Receive/Bi-Directional Path

The “receive/bidirectional” has two basic modes of operation:

- Receive only - when the PA is enabled (the MC1322x separate auxiliary on-chip PA outputs are enabled), and the receive path is the normal single-ended RF_RX_TX port. In this mode, the antenna switch is actively enabled to either the transmit path or the receive path based on the present state of the radio.

- Bi-directional - this RF design can also be used in a lower TX power mode where the PA is disabled. For this case, the MC1322x uses only the RF_RX_TX port as a bi-directional single-ended port for both transmit and receive. In this mode, the antenna switch is enabled for the normal receive path and left in this state as this path now also becomes the transmit path

For the receive path, the incoming signal is derived from either the F-antenna or the SMA, depending on which is enabled, and it drives the IN port of the antenna switch. The antenna switch OUT1 port must be enabled (MC1322x control signal RX_ON active high) and the schematic signal 22x_RF_INPUT is driven. This signal is ac-coupled to the RF_RX_TX port of the MC1322x.

3.3.4.3 RF Control Signals

The MC1322x provides four control signals that can be dedicated to external RF elements, i.e., ANT_1, ANT_2, RX_ON, and TX_ON (refer to *MC1322x Advanced ZigBee™- Compliant SoC Platform for the 2.4 GHz IEEE® 802.15.4 Standard Reference Manual*, document number MC1322xRM, for detailed information). For the 1322x-ERB, two of these are used, i.e., RX_ON, and TX_ON, and a separate GPIO designated as ADC1 is used to enable the 2.2 Vdc regulator (LDO_2 in Figure 3-1).

- ADC1 enables the 2.2 Vdc regulator for external PA (high TX power) operation. ADC1 is switched under software control and is not dynamically switched.
- RX_ON and TX_ON are dynamically switched by the radio state machines when used with PA operation and must be enabled via software initialization.
- For bi-directional mode, RX_ON = 1 and TX_ON = 0 and are static. The signals should be set to these states under software control.

Table 3-1 summarizes the state of the control signals versus operational mode.

NOTE

See the MC1322x Reference Manual for a complete description of the dynamic operation of the RF control signals..

Table 3-1. RF Control Signal State versus Operational Mode

Mode	RX_ON	TX_ON	ADC1	Comment
PA disabled	Hi	Low	Low (static)	2.2 Vdc LDO disabled
PA enabled TX	Low	Hi	Hi (static)	MC1322x Aux PA enabled
PA enabled RX	Hi	Low	Hi (static)	MC1322x Aux PA enabled
Bi-directional	Hi	Low	Low (static)	MC1322x Primary PA enabled

3.4 Configuration of MC1322x with an External PA

This section describes the required the device configuration and support software for the 1322x-ERB to use the MC1322x with an external PA.

NOTE

It is not the intent of this section to provide detailed descriptions of the software tools and utilities to affect the required MC1322x configuration. These are extensively described in the following documentation and the user is directed to reference the listed sources:

- *MC1322x Reference Manual*, Section 3.9.2, “Extended RF Performance”
- *802.15.4 MAC PHY Reference Manual*
- *MC1322x Simple Media Access Controller (SMAC) Reference Manual*

3.4.1 Configuration Areas

The MC1322x configuration must address the areas of PA usage, TX power levels, and RF control signals.

3.4.1.1 Onboard TX PA Usage

The MC1322x has two sets of complementary PA outputs.

- The primary PA is enabled for single-port, bi-directional mode (RF_RX_TX).
- When the external PA is enabled, the auxiliary PA (pinned-out on the package) must be alternatively enabled.

3.4.1.2 TX Output Power

The MC1322x is capable of TX power output from about -30 dBm to +4 dBm on a programmable basis.

When an external PA is in use:

- There are limits on the usable power - the user desired MC1322x transmit power level is selected by a function call. When an external PA is in use, a mode called “Power Lock” must be enabled which further restricts the legal number of usable steps. Table 3-2 lists the range of selectable power levels (hex) and gives the corresponding MC1322x transmit power, shows which are available in Power Lock, and finally shows the expected module output power delivered to the SMA or F-antenna. Also, included for reference is typical total module current.

Table 3-2. 1322x-ERB PA Level vs. Output Power

Power Level (Hex)	MC1322x Transmit Power[1] (dBm)	Available for PowerLock[2]	Typical External PA Transmit Power[3] (dBm)	Typical Total Supply Current (mA)
0	-30	**Yes**	**2**	**65**
1	-28	**Yes**	**3**	**66**

Table 3-2. 1322x-ERB PA Level vs. Output Power (continued)

Power Level (Hex)	MC1322x Transmit Power[1] (dBm)	Available for PowerLock[2]	Typical External PA Transmit Power[3] (dBm)	Typical Total Supply Current (mA)
2	-27	**Yes**	**5**	**67**
3	-26	**Yes**	**6.5**	**68**
4	-24	**Yes**	**8**	**70**
5	-21	**Yes**	**10**	**73**
6	-19	**Yes**	**12**	**80**
7	-17	**Yes**	**13.5**	**87**
8	-16	No		
9	-15	No		
A	-11	No		
B	-10	No		
C	-4.5	**Yes**	**21.5**	**220**
D	-3	No		
E	-1.5	No		
F	-1	No		
10	1.7	No		
11	3	No		

1 The listed MC1322x output power is measured at the MC1322x port

2 When Power Lock is enabled only the power settings shown as available may be used. This feature is intended for use with an external PA.

3 The listed PA output power is measured at the SMA port of the pcb

- The highest IEEE 802.15.4 channel (Ch 26, 2480 MHz) cannot be used because of band edge power limitations.

When an external PA is not in use (bi-directional mode), PowerLock is disabled and all normal power levels may be used.

3.4.1.3 RF Control Signals

As described in Section 3.3.4, “RF Circuitry”, the MC1322x has dedicated signals that can be enabled to control external RF elements dynamically without software intervention. For the 1322x-ERB, RX_ON, TX_ON and ADC1 are used, and must be enabled/configured for different modes.

When the PA is enabled:

- RX_ON (dynamic switching) - has two modes and the active high during RX mode must be enabled. This signal enables the proper port on the antenna switch for receive and bi-directional modes.

- TX_ON (dynamic switching) - has two modes and the active high during TX mode must be enabled.This signal enables the proper port on the antenna switch for PA transmit mode and not active for bi-directional mode
- A third control signal ADC1 (a GPIO) enables the 2.2 Vdc LDO regulator (active high). This signal must also be configured or programmed to the active state when the PA is in use.

When the PA is not enabled:

- RX_ON - is used, but is not dynamically switched. Enable as always high.
- TX_ON - is used, but is not dynamically switched. Enable as always low.
- ADC1 disables the 2.2 Vdc LDO regulator (active high). Enable as always low.

3.4.2 Configuration Methods

When regarding RF operation of the 1322x-ERB, there are two basic modes consisting using the external PA (highest TX power) or using bi-directional mode (without the PA, allows lower power).

- The user may choose to configure and enable external PA mode and not change it. This happens as part of the project build in the BeeKit tools.
- The user may alternatively choose to make both the external PA and bi-directional modes available, where the mode switch is dynamically done through software function calls

When a project is built in the Freescale BeeKit environment, a configuration tool allows all the various features to be selected to the desired state. If dynamic alteration of mode is required, the Freescale-provided 802.15.4 MAC and 22xSMAC software provides function calls for this dynamic configuration. Table 3-3 lists the appropriate function call for each RF feature for both software bases.

Table 3-3. API Function Calls to Configure 1322x-ERB RF Operation

RF Feature	Function Call	Software Base[1]
Enable Power Lock	Asp_SetPowerLevelLockMode (bool_t enableLock)	802.15.4 MAC
	uint8_t SetPowerLevelLockMode(bool_t state)	22xSMAC
Set RF TX Power Level	Asp_SetPowerLevel (uint8_t powerLevel)	802.15.4 MAC
	FuncReturn_t MLMEPAOutputAdjust (uint8_t u8Power)	22xSMAC
Enable Secondary PA	Asp_EnableComplementaryPAOutput (bool_t enable)	802.15.4 MAC
	void SetComplementaryPAState(bool_t state)	22xSMAC
Configure RF Control	uint8_t Asp_ConfigureRFCtlSignals (AspRfSignalType_t signalType, AspRfSignalFunction_t function, bool_t gpioOutput, bool_t gpioOutputHigh)	802.15.4 MAC
	void ConfigureRfCtlSignals(RfSignalType_t signalType, RfSignalFunction_t function, bool_t gpioOutput, bool_t gpioOutputHigh)	22xSMAC
Set Demodulator Type	void Asp_SetDemodulatorType(bool_t demDCDenable)	802.15.4 MAC
	void SetDemulatorMode(DemTypes_t demodulator)	22xSMAC

[1] For the 802.15.4 MAC, refer to the *802.15.4 MAC PHY Reference Manual* and for the 22xSMAC, refer to the *MC1322x Simple Media Access Controller (SMAC) Reference Manual.*

The ADC1 signal that controls the 2.2 Vdc LDO is an exception. The user must provide application control code to if low power and/or dynamic alteration is desired.

3.5 Operational Modes

The basic use of the module has the following operation modes:

- MC1322x MCU active with radio inactive - this mode can have the 2.2 Vdc LDO enabled or disabled; there is very little difference in current.
- MC1322x MCU and radio active with PA enabled - this will have greatest RF range and highest current. All RF control signals must be enabled for dynamic operation, auxiliary PAs must be enabled, and Power Lock enabled. The 2.2 Vdc LDO must be enabled.
- MC1322x MCU and radio active with PA disabled (bi-directional mode) - this mode allows lower TX power levels if desired. For the RF control signals; a) RX_ON must be set high (static), and b) TX_ON must be set low (static). Primary PAs are selected, and Power Lock disabled. The 2.2 Vdc LDO should be disabled.
- Low power - when the MC1322x is placed in a low power mode (Hibernate of Doze), all the GPIO except the KBI signals revert to inputs. By default, this powers down the 2.2 Vdc LDO, and the RF circuitry is also in low power mode.

3.6 User Hardware Interfaces

The 1322x-ERB user interfaces are described in detail in Chapter 4, “Interface Locations and Pinouts”. These include:

- SMA connector for RF test and evaluation
- JTAG debug port for ARM7 MCU on the MC1322x
- MC1322x FLASH erase header
- 20-Pin User Interface to provide access for primary power source, various serial interfaces and GPIO

Chapter 4
Interface Locations and Pinouts

This chapter provides a description of the interface locations and pinouts of the 1322x Extended Range Board printed circuit board (PCB).

4.1 Overview

This chapter details the locations (as shown in Figure 4-1) of connectors on the 1322x Extended Range Board circuit board. Users should reference this figure and the circuit board schematic in Chapter 5, “Schematic, Board Layout, and Bill of Material” for additional information.

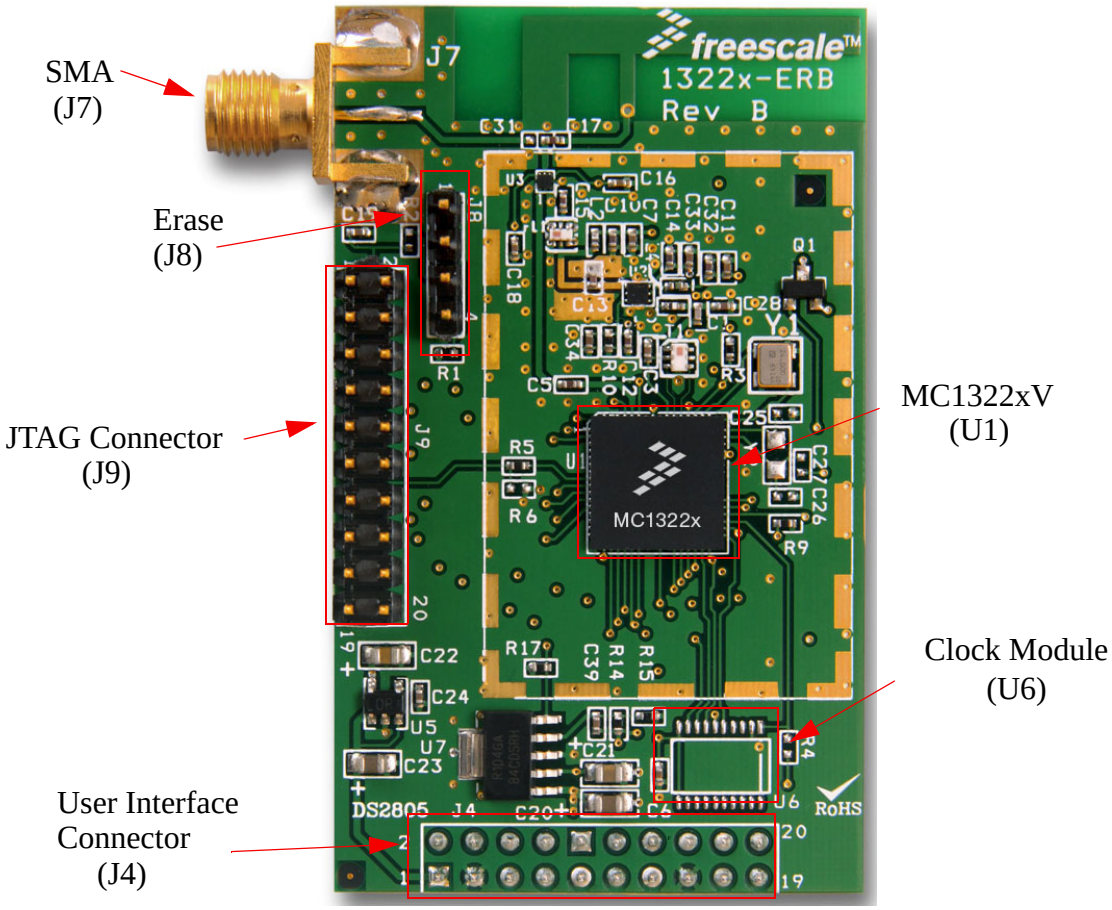

Figure 4-1. 1322x Extended Range Board PCB Top View

4.2 Board Power

The main power (V_IN) to the board is supplied through J4, see Section 4.6, “20-Pin User Interface (J4)” below.

4.3 RF SMA Connector (J7)

The board build option shown provides an RF SMA connector. The RF signal trace is ac-coupled through a capacitor to the antenna, and a second path to the connector is also available via an ac-coupled option. When using the board for direct connected test, the coupling cap to the antenna is removed, and the path to the RF connector is enabled through a second coupling cap.

4.4 Debug/Development JTAG Interface (J9)

The module supports the standard ARM 20-pin JTAG debug port (J9) that only requires a simple interface cable to connect to the PC and uses standard ARM software development tools. Table 4-1 shows the device pins that are connected to the JTAG header pins.

Table 4-1. ARM JTAG 20-Pin Connector Assignments (J9)

Name	Pin #	Pin #	Name
Vreg_3.3	1	2	Vreg_3.3
NC	3	4	GND
TDI	5	6	GND
TMS	7	8	GND
TCK	9	10	GND
RTCK	11	12	GND
TDO	13	14	GND
RESET[1]	15	16	GND
NC	17	18	GND
NC	19	20	GND

[1] MC1322x does not support separate JTAG reset TRST.

4.5 FLASH Memory Recovery Jumpers and Erase (J8)

The MC1322x has an onboard serial FLASH that stores the memory image that gets loaded into RAM at boot. If it becomes necessary to change or update the image in FLASH, there are two possible means of doing so:

- JTAG Debug Port (J9) - if the ARM debug tools are in use, the FLASH image can be changed.
- Load a new FLASH image via one of the various serial interfaces after erasing the current image - if the MC1322x boot flow detects that there is no valid FLASH image, the flow will attempt to acquire a RAM boot image from one of the serial interfaces.

— The FLASH must first be erased by following the procedure given below.

— The J4 User Interface provides access to the UART1, SPI, and I2C serial interfaces. One of these can be used as a RAM boot image source. Implementing this process is beyond the scope of this manual, the user is directed to Section 3.11 of the above cited *MC1322x Reference Manual* for a complete description of the MC1322x bootloader and the boot flow.

Figure 4-2 illustrates Header J8 which is used to erase the MC1322x FLASH image.

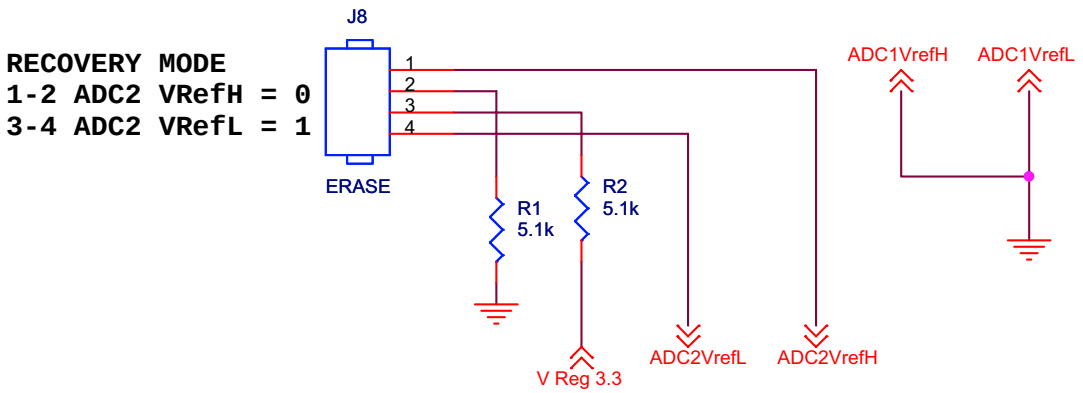

Figure 4-2. FLASH Erase Jumper Header (J8)

To erase FLASH:

1. Place a shorting bar (jumper) across J8, Pins 1 and 2
2. Place a second shorting bar across J8, Pins 3 and 4
3. Power up the 1322x-ERB module via J4
4. Assert the hardware reset signal low via J4, Pin 10
5. Release the reset to high and wait a short period
6. Power down the board
7. Remove the J8 shorting bars
8. The module is now ready for a boot operation through the user's custom hardware

4.6 20-Pin User Interface (J4)

The User Interface connector (J4) is a standard 2.54mm/0.1inch spacing, 20-pin header. The connector provides access to selected MCU GPIO and serial interface ports. Power is also provided on the connector. Table 4-2 lists signal assignments for Connector J4.

- V_IN is the main supply voltage. Current draw can be as high as 180-200 mA.
- The MC1322x may need 24 MHz reference clock load trimming. TMR1 can be used to monitor system clock.
- Access to serial interfaces include UART1, I2C, and SPI ports.
- A single ADC input channel is available on ADC0.
- The KBI_7-KBI_4 signals have special usage; refer to the MC1322x Reference Manual. KBI_7 cannot be used when the optional clock module is mounted. See comments in Table 4-2.

- Match GPIO / interface signals to the 3.3V on module VBatt. See Table 4-2, Footnote 1

Table 4-2. User Interface Connector J4 Pinouts

Pin	Name	Function[1]	Notes
1	V_IN	Main supply to module	Rated for voltage range of 3.5-15 Vdc. This voltage range changes if the 3.3 Vdc LDO is not used in the design
2	SPI_SS	SPI Port Slave Select / GPIO4	
3	GND	System ground	
4	SPI_MOSI	SPI Port MOSI / GPIO6	
5	UART1_TX	UART1 TX Data Output / GPIO14	
6	SPI_MISO	SPI Port MISO / GPIO5	
7	UART1_RX	UART1 RX Data Input / GPIO15	
8	SPI_SCK	SPI Port Clock / GPIO7	
9	ADC0	ADC analog input Channel 0 / GPIO30	
10	RESETB	Hardware, asynchronous reset input to MC1322x	Active low. Pullup on module
11	I2C_SDA	I^2C Bus Data / GPIO13	No external pullup on module
12	UART1_RTS	UART1 Request to Send Input / GPIO21	
13	I2C_SCL	I^2C Bus Clock or GPIO	No external pullup on module
14	UART1_CTS	UART1 Clear to Send Output / GPIO12	
15	GND	System ground	
16	TMR1	Timer 1 IO signal / GPIO9	Can be used as MC1322x reference clock monitor
17	KBI_4	Keyboard Interface Bit 4 / GPIO26	Asynchronous interrupt input with wake-up capability
18	KBI_5	Keyboard Interface Bit 5 / GPIO27	Asynchronous interrupt input with wake-up capability
19	KBI_6	Keyboard Interface Bit 6 / GPIO28	Asynchronous interrupt input with wake-up capability
20	KBI_7	Keyboard Interface Bit 7/ GPIO29	Asynchronous interrupt input with wake-up capability. This signal can only be used when the clock module is not in use and R4 (0 Ω) must be mounted.

[1] Interface all GPIO or port signals with buffers at VDD = 3.3 Vdc; these signals must match the VBatt voltage to the MC1322xV which is the regulated 3.3 Vdc.

4.7 32.768 kHz External Real Time Clock Module (RX-4801 JE, U6)

The location of the optional clock module U6 is shown in Figure 4-1. If U6 is mounted and used, the 32.768 kHz crystal Y1 and its load capacitors C25 and C26 cannot be used. Also KBI_7 should be disconnected from Connector J4 by leaving resistor R4 unmounted.

Chapter 5
Schematic, Board Layout, and Bill of Material

5.1 Schematic

The 1322x Extended Range Board schematic is shown in Figure 5-1, Figure 5-2, and Figure 5-3.

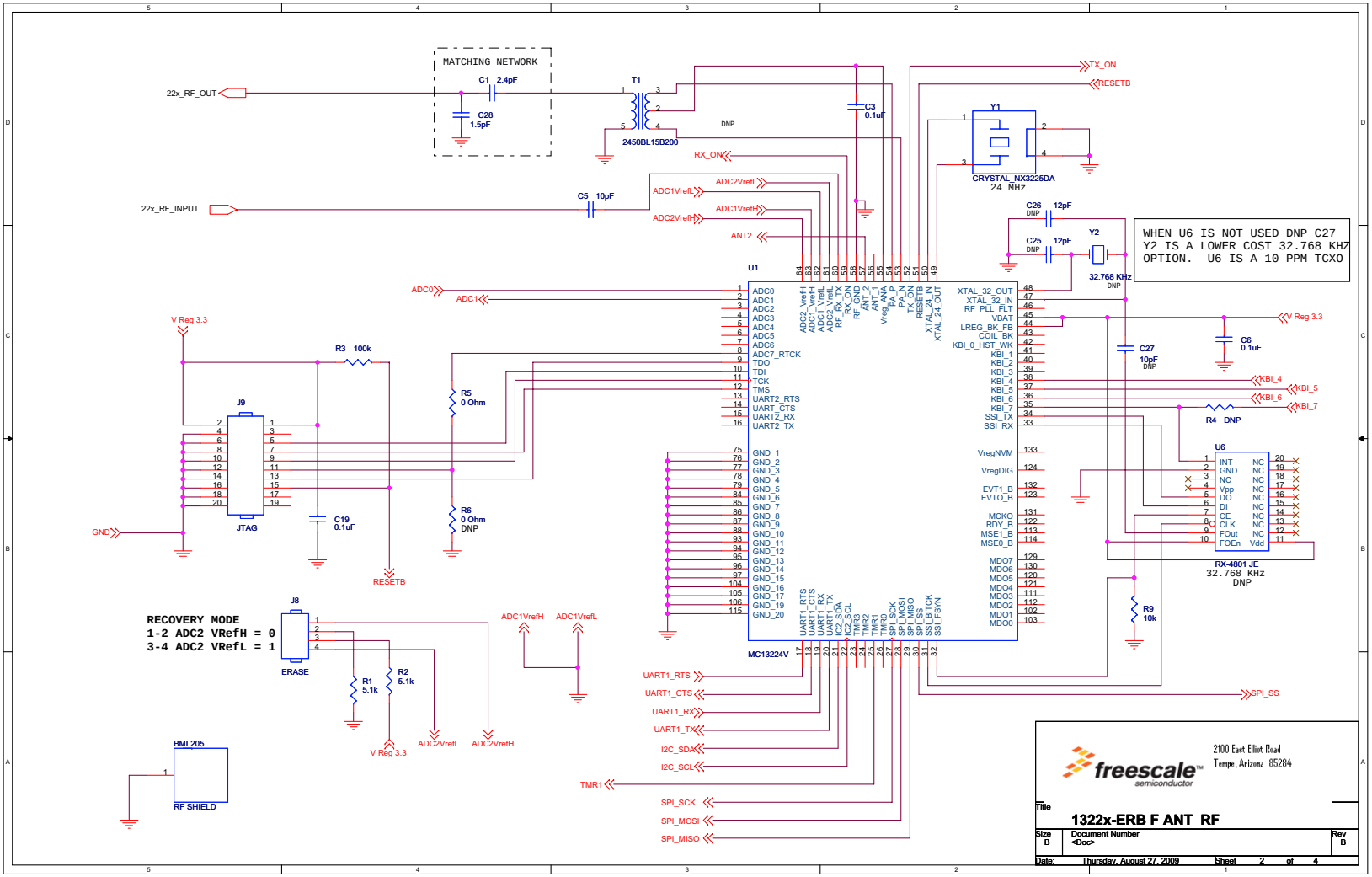

Figure 5-1. 1322x Extended Range Board Schematic (1 of 3)

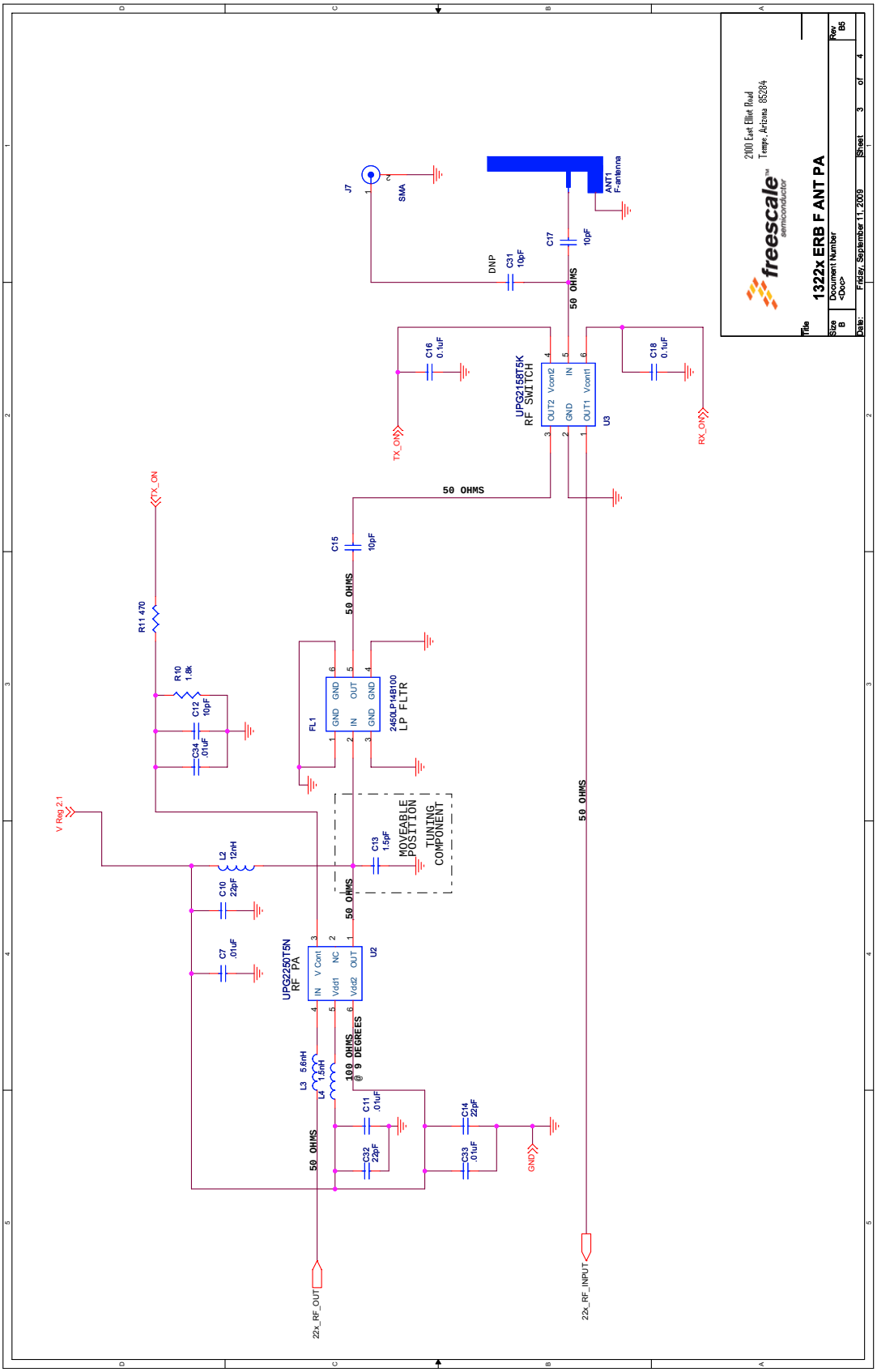

Figure 5-2. 1322x Extended Range Board Schematic (2 of 3)

VOLTAGE IS + or - 30mV

	MIN V OUT	R 14 1%	R 15 1%
	1.295v	0 OHM	OPEN
	1.8v	4.64k	13k
	2.0v	6.8k	13k
	2.1v	7.87k	13k
DEFAULT	2.2v	8.87k	13k
	2.4v	11.0k	13k
	3.0v	16.9k	13k
	3.3v	20.0k	13k

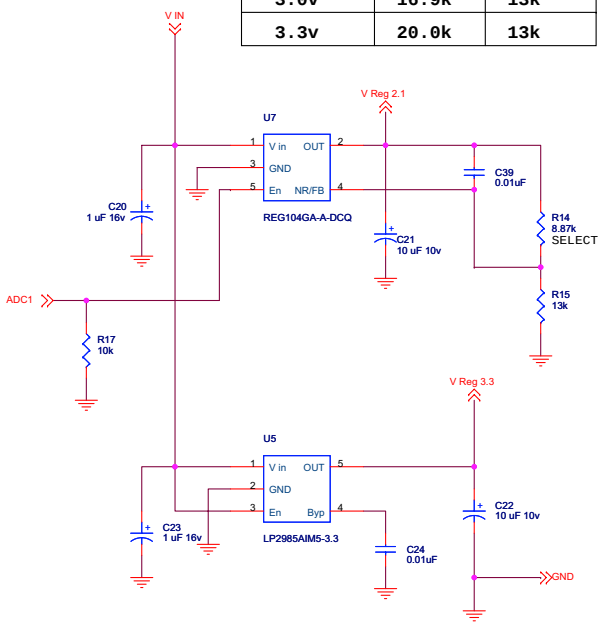

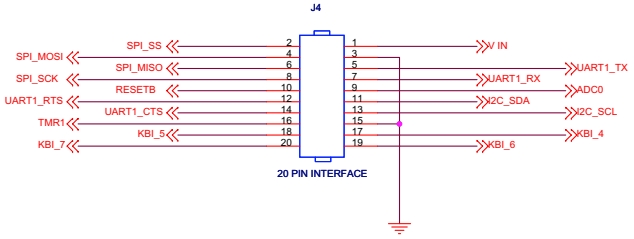

freescale semiconductor
2100 East Elliot Road
Tempe, Arizona 85284

Title
1322x ERB F ANT Power and I/O

Size	Document Number	Rev
B	<Doc>	B

Date: Thursday, August 27, 2009 Sheet 4 of 4

Figure 5-3. 1322x Extended Range Board Schematic (3 of 3)

5.2 Board Layout

5.2.1 Layout Views

Various views of the 1322x Extended Range Board layout are shown in Figure 5-4, Figure 5-5, and Figure 5-6.

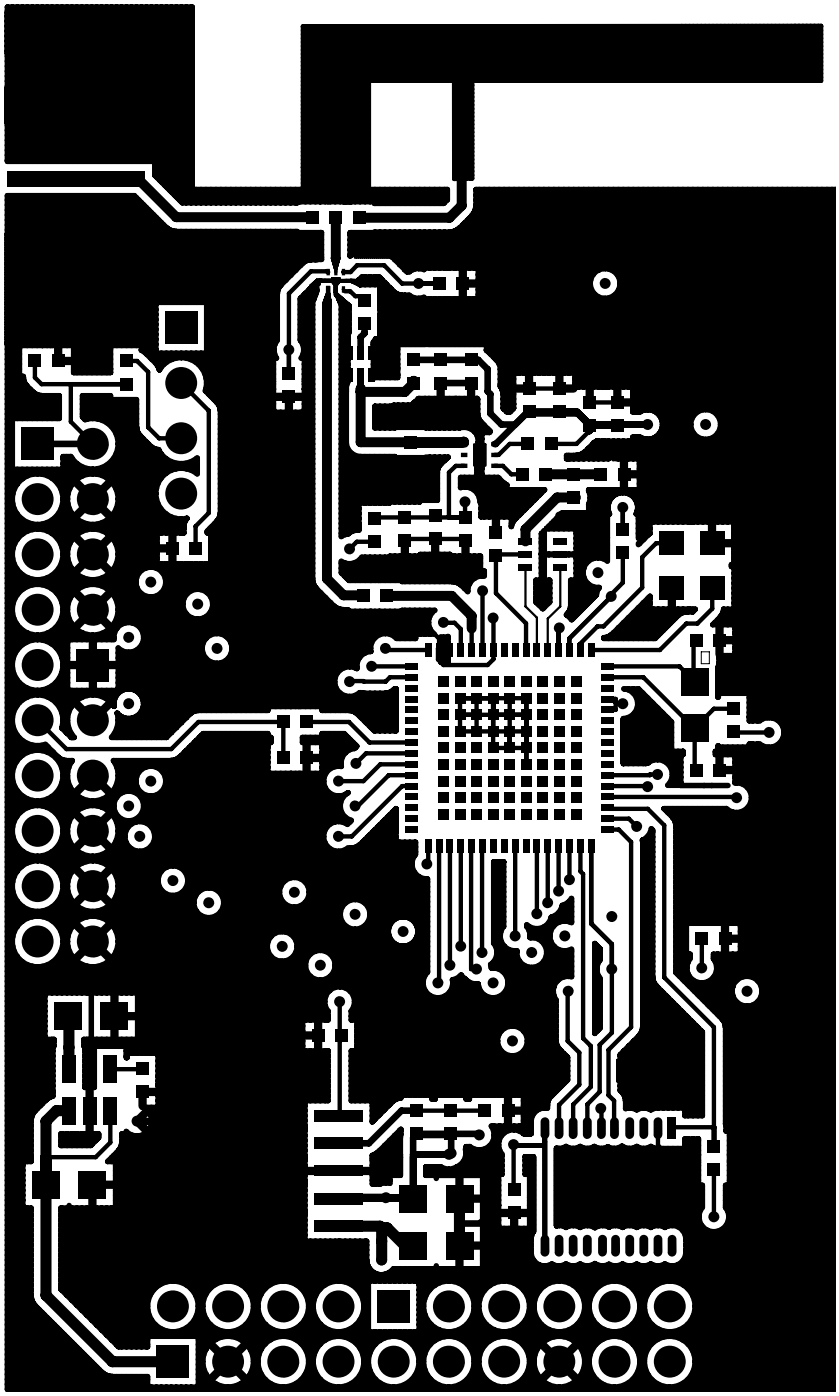

Figure 5-4. 1322x Extended Range Board PCB Layout (Top View)

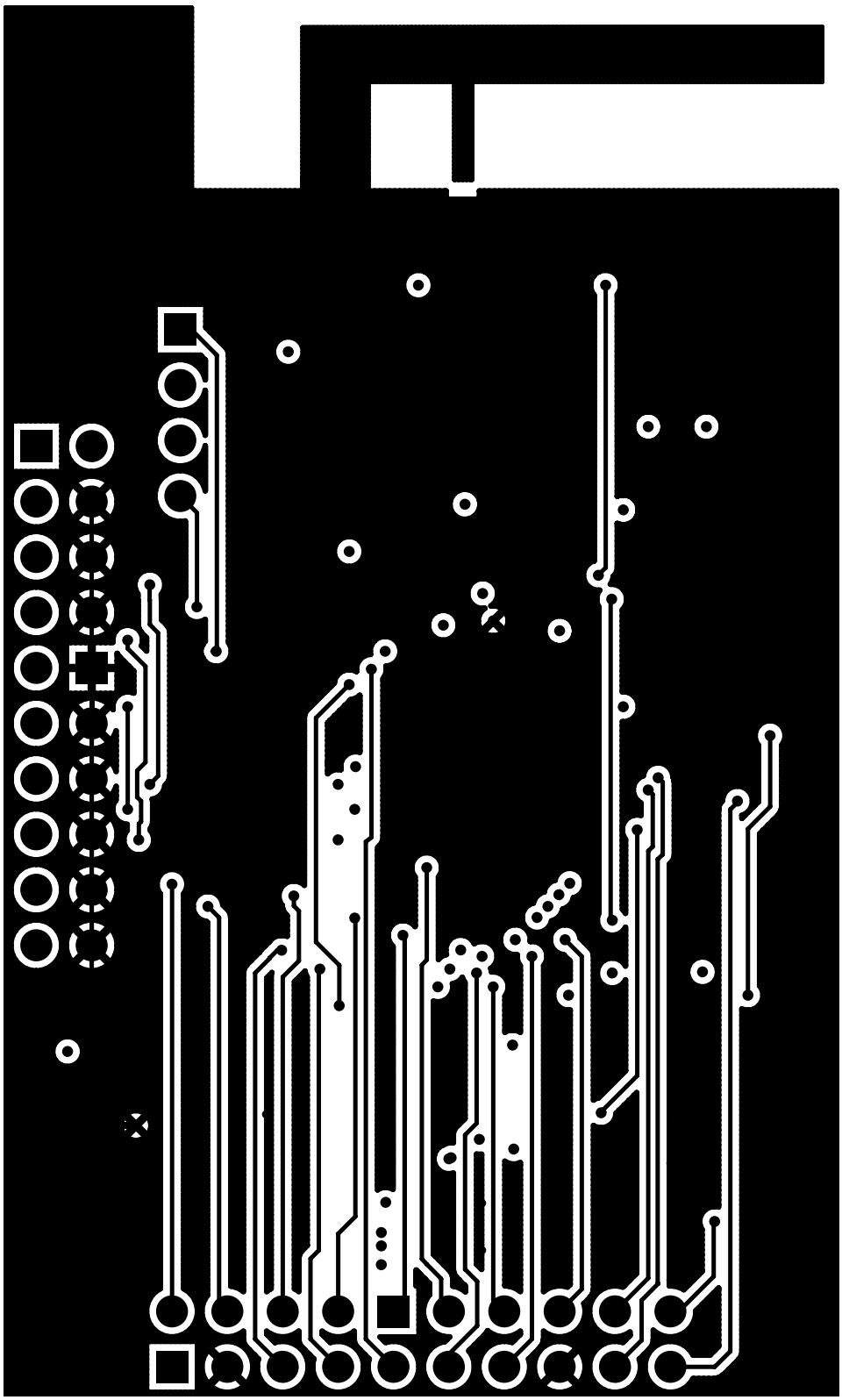

Figure 5-5. 1322x Extended Range Board PCB Layout (Bottom View)

5.2.2 IC Footprint

The Freescale *ZigBee Hardware Design Consideration Reference Manual* (ZHDCRM) provides guidelines for the layout of the IC footprint. This design was done in mils with 30 mil pitch for the pads on the backside of the IC while the recommended pitch is 0.8 mm. Either spacing will yield acceptable assembly results.

This layout also employs the vias in an alternate ground pad option described in Freescale *ZigBee Hardware Design Considerations Reference Manual* (ZHDCRM). This approach gives acceptable assembly yields without filled via. The user should consult with their assembly vendor on whether to use this or the filled via approach.

5.2.3 Optional RF Shield

Figure 5-6 shows a top view of the component locations on the PCB and denotes the outline of an RF metal Faraday shield. The component side shield is optional, except if the design were manufactured and sold as a standalone module, then the shield would be required.

The component side solder mask is opened to reveal rectangles of the component side ground metal to allow the RF shield to be soldered to the board (see also Figure 2-1). The RF shield (Part Number BMIS-205, Laird Technologies) is constructed of two pieces designated as a Bottom and a Top. The bottom is soldered to the board, and the top or cap is retained on the bottom by spring clip action.

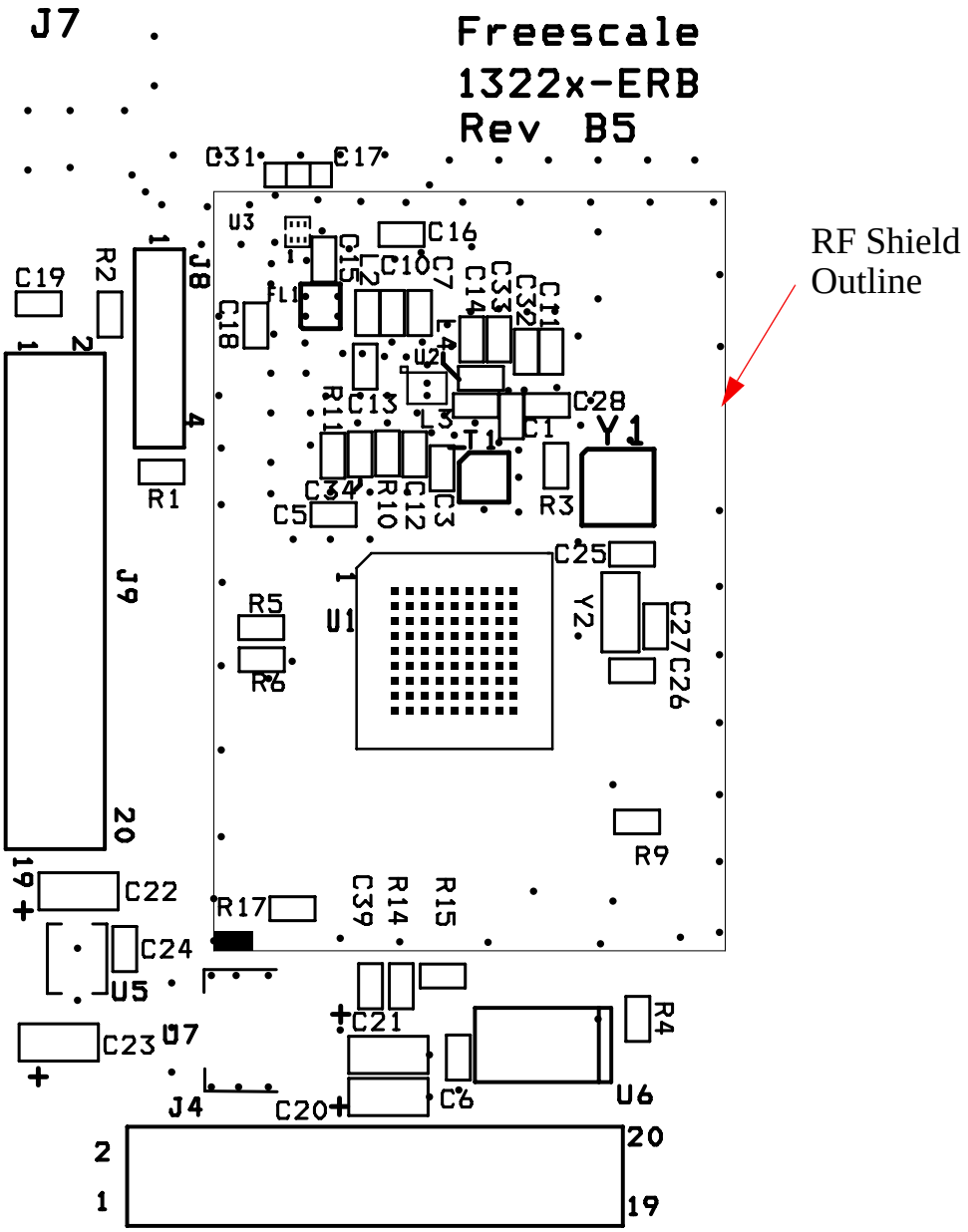

Figure 5-6. 1322x Extended Range Board PCB Component Location (Top View)

5.3 Bill of Materials

Table 5-1 lists the bill of material components.

Table 5-1. Bill of Materials

Qty.	Part Reference	Description	Value	Part Number	Mfg.
1	ANT1	Printed F-antenna			
1	BMI 205 (optional)	RF SHIELD (2 pieces)		BMIS-205-F (BOTTOM)	Laird Technologies
				BMIS-205-C (TOP)	Laird Technologies
1	C1	Hi-Q Capacitor (0402)	2.4pF	GJM1555C1H2R4BB01	Murata (Do Not Substitute)
5	C3,C6,C16,C18,C19	Capacitor (0402)	0.1uF	C0402X7R100-104KNE	Venkel or Equivalent
4	C5,C12,C15,C17	Capacitor (0402)	10pF	C0402C0G250-100KNE	Venkel or Equivalent
2	C27,C31 (DNP)	Capacitor (0402)	10pF	C0402C0G250-100KNE	Venkel or Equivalent
6	C7,C11,C24,C33,C34,C39	Capacitor (0402)	.01uF	C0402X7R160-103KNE	Venkel or Equivalent
3	C10,C14,C32	Capacitor (0402)	22pF	C0402C0G250-220KNE	Venkel or Equivalent
2	C13,C28	Capacitor (0402)	1.5pF	GJM1555C1H1R5BB01	Murata Do Not Sub
2	C20,C23	Capacitor (0402)	1 uF 16v	TA016TCM105KAR	Venkel or Equivalent
2	C21,C22	Capacitor (0402)	10 uF 10v	TA010TCM106KAR	Venkel or Equivalent
2	C25,C26 (DNP)	Capacitor (0402)	12pF	C0402C0G250-120KNP	Venkel or Equivalent
1	FL1	Low Pass Filter		2450LP14B100	Johanson Technology or Equivalent
1	J4 Interface	Header 2x10		4-103186-0	Tyco
1	J7 SMA	Connector RF		142-0701-881	Johnson Components
1	J8 Erase	Header 1x4		4-103185-0	Tyco
1	J9 JTAG	Header 2x10		4-103186-0	Tyco
1	L2	Inductor (0402)	12nH	LMCI1005-12NJT	Venkel or Equivalent
1	L3	Inductor (0402)	5.6nH	LMCI1005-5N6JT	Venkel or Equivalent
1	L4	Inductor (0402)	1.5nH	LQG15HN1N5S02	Murata (Do Not Substitute)
2	R1,R2	Resistor (0402)	5.1k	CR0402-16W-512JT	Venkel or Equivalent
1	R3	Resistor (0402)	100k	CR0402-16W-104JT	Venkel or Equivalent
1	R4, R6 (DNP)	Resistor (0402)	0 Ohm	CR0402-16W-000T	Venkel or Equivalent
2	R5	Resistor (0402)	0 Ohm	CR0402-16W-000T	Venkel or Equivalent
2	R9,R17	Resistor (0402)	10k	CR0402-16W-103JT	Venkel or Equivalent
1	R10	Resistor (0402)	1.8k	CR0402-16W-182JT	Venkel or Equivalent
1	R11	Resistor (0402)	470 Ohm	CR0402-16W471JT	Venkel or Equivalent
1	R14	Resistor (0402)	8.87k 1%	ERJ-2RKF8871X	Panasonic or Equivalent

Table 5-1. Bill of Materials

Qty.	Part Reference	Description	Value	Part Number	Mfg.
1	R15	Resistor (0402)	13k 1%	ERJ-2RKF1302X	Panasonic or Equivalent
1	T1	RF Balun - 50(unbal)/200(bal)		2450BL15B200	Johanson Technology
1	U1	IC TRANCEIVER		MC1322x	Freescale Semiconductor
1	U2	IC RF PA		UPG2250T5N	CEL/NEC
1	U3	IC RF Sw.		UPG2158T5K	CEL/NEC
1	U5	IC LDO Reg	3.3V Reg	LP2985AIM5-3.3	National Semiconductor
1	U6 (DNP)	IC TCXO	32.768 kHz	RX-4801 JE	Epson Toyocom
1	U7	IC Reg Adj.		REG104GA-A-DCQ	TI
1	Y1	Crystal SM	24 MHz	Type NX3225SA, Spec # EXS00A-CS02020	Nihon Dempa Kogyo (NDK)
1	Y2 (DNP)	Crystal 32.768 KHz		FC-135 SUB FC-13F	Epson Toyocom

Chapter 6
PCB Manufacturing Specifications

This chapter provides the specifications used to manufacture the 1322x Extended Range Board printed circuit board (PCB).

The 1322x Extended Range Board PCB must comply with the following:

- The PCB must comply with Perfag10/3C (http://www.perfag.dk/Uk/ukindex.htm)
- The PCB manufacturer's logo is required
- The PCB production week and year code is required
  - The manufacturer's logo and week/year code must be stamped on the back of the PCB solder mask
  - The PCB manufacturer can not insert text on the PCB either in copper or in silkscreen without written permission from Freescale Semiconductor, Inc.
- The required Underwriter's Laboratory (UL) Flammability Rating
  - The level is 94V-0 (http://www.ul.com/plastics/flame.html)
  - The UL information must be stamped on the back of the PCB solder mask

NOTE

- A complete set of design files is available the 1322x Extended Range Board at the Freescale web site (http:www.freescale.com/802154) under reference designs. It is recommended that this design or one of a number of other reference designs be used as a starting point for a custom application.
- The *Freescale IEEE 802.15.4 / ZigBee Package and Hardware Layout Considerations Reference Manual*, Document Number: ZHDCRM is also available at the same web site to provide additional design guidance.

6.1 Single PCB Construction

This section describes individual PCB construction details.

- The PCB is a four-layer, multi layer design
- The PCB contains no blind, buried, or micro vias
- PCB data:
  - Size: Approximately 85 x 50 mm (3.34 x 1.96 inches)
  - Final thickness (Cu/Cu): 0.864 mm (0.034 inches) +/- 10% (excluding solder mask)

- The following table defines each layer of the completed PCB. The artwork identification refers to the name of the layer in commonly used terms.

Table 6-1. Layer by Layer Overview

Layer	Artwork Identification	File Name
1	Silk Screen Top	xxx.SST
2	Solder Mask	xxx.SMT
3	Metal 1	xxx.TOP
4	Metal 2	xxx.GND
5	Metal 3	xxx.IN1
6	Metal 4	xxx.BOT
7	Solder Mask	xxx.SMB
8	Silk Screen Bottom	xxx.SSB

NOTE

The 1322x Extended Range Board contains high frequency 2.4 GHz RF circuitry. As a result , RF component placement, line geometries and layout, and spacing to the ground plane are critical parameters. As a result, BOARD STACKUP GEOMETRY IS CRITICAL. Dielectric and copper thicknesses and spacing must not be changed; follow the stackup (see Figure 6-1) information is provided with the reference design.

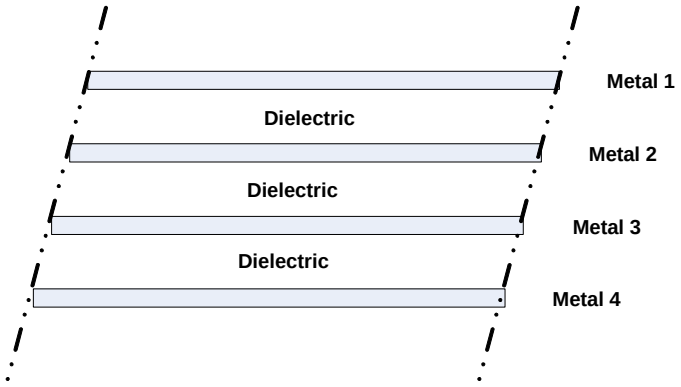

Figure 6-1. PCB Stackup Cross-Section

- Solder mask is required
- Silk screen is required

6.2 Panelization

The panel size can be negotiated depending on production volume.

6.3 Materials

The PCB composite materials must meet the following requirements:

- Laminate - The base laminate material (laminate) must be FR4. If the laminate material were changed the RF electrical characteristics may change and degrade RF performance. Dielectric thickness for each of the three layers is 10 mils.
- Copper Foil -
  - Top and Bottom copper layers must be 1 oz. copper
  - Interior layers must be 1/2 oz. copper
- Plating - All pad plating must be Hot Air Levelling (HAL)

6.4 Solder Mask

The solder mask must meet the following requirements:

- Solder mask type: Liquid Film Electra EMP110 or equivalent
- Solder mask thickness: 10 – 30 µm

6.5 Silk Screen

The silk screen must meet the following requirements:

- Silkscreen color: White
- Silkscreen must be applied after application of solder mask if solder mask is required
- The silkscreen ink must not extend into any plated-thru-holes
- The silk screen must be clipped back to the line of resistance

6.6 Electrical PCB Testing

- All PCBs must be 100 percent tested for opens and shorts
- Impedance Measurement - An impedance measurement report is not mandatory

6.7 Packaging

Packaging for the PCBs must be the following requirements:

- Finished PCBs must remain in panel
- Finished PCBs must be packed in plastic bags that do not contain silicones or sulphur materials. These materials can degrade solderability.

6.8 Hole Specification/Tool Table

See the `xxx.DRD` file included with the Gerber files.

6.9 File Description

Files included with the download include Design, Gerber and PDF files.

Gerber files are RS-374x format. Not all files included with the Gerber files are for PCB manufacturing.

PDF files included are the schematic and the printable layout files.

Design files are in OrCAD format with OrCAD schematic capture.